INTERIM REMEDIAL ACTION PLAN

Former Chemoil Refinery
2020 Walnut Avenue, Signal Hill, California 90806

Site Cleanup Program No. 0453A, Site ID No. 2047W00
Global ID SL2047W2348

Prepared for
Signal Hill Holding Company
1900 South Norfolk Street, Suite 350, Signal Hill, California 90806

October 24, 2012

Submitted to

Ms. Ann Lin
California Regional Water Quality Control Board, Los Angeles Region
420 West 4th Street, Suite 200
Los Angeles, California 90013

4130 Cahuenga Boulevard, Suite 113, Los Angeles, California 91602
818.824.8102 • 818.824.8112 fax
www.amiadini.com • mail@amiadini.com

October 24, 2012
Project No. ChemOil.p01
Via E-mail

Ms. Ann Lin
California Regional Water Quality Control Board, Los Angeles Region
420 West 4th Street, Suite 200
Los Angeles, California 90013

Re: Interim Remedial Action Plan, Former Chemoil Refinery, 2020 Walnut Avenue, Signal Hill, California 90806, Site Cleanup Program No. 0453A, Site ID No. 2047W00, Global ID SL2047W2348

Dear Ms. Lin:

Ami Adini & Associates, Inc. (AA&A), has prepared this *Interim Remedial Action Plan* (IRAP) at the request of the Signal Hill Holding Company (SHHC) to present a scope of services to mitigate petroleum hydrocarbon contaminants identified in groundwater along the western and southern boundaries of the site as required by the Los Angeles Regional Water Quality Control Board. AA&A reviewed options for the remediation of groundwater contamination at the site and evaluated them for effectiveness, efficiency, and economics. The objective of this IRAP is to propose a remedial technology to efficiently and economically address the mitigation of groundwater contamination along the western and southern boundaries of the site.

We respectfully submit and request a prompt review of this workplan. If you have any questions, please contact us at (818) 824-8102.

Respectfully submitted,
AMI ADINI & ASSOCIATES, INC.

PROFESSIONAL GEOLOGIST
GABRIELE E. BAADER
NO. 7015
EXP. APR. 30, 2014
STATE OF CALIFORNIA

Gabriele Baader, PG
Director of Environmental Engineering
Professional Geologist No. 7015, Expiration April 30, 2014

GB:mrd

cc: Addressee (PDF & GeoTracker)
Signal Hill Holding Company (PDF)
Mr. Tom Graf, Grafcon (PDF)

4130 Cahuenga Blvd., Ste 113 • Los Angeles, CA 91602 • Phone 818.824.8102 • Fax 818.824.8112
www.amiadini.com • mail@amiadini.com

TABLE OF CONTENTS

Common Abbreviations i
Professional Certification iv
Third-Party Liability Disclaimer v
Executive Summary vi

1. INTRODUCTION 1
   1.1 Objective 1
2. BACKGROUND AND SITE HISTORY 1
   2.1 Previous Assessments, Monitoring and Remediation 1
3. GROUNDWATER MONITORING 2
4. GEOLOGY / HYRDOGEOLOGY 3
   4.1 Regional Geology 3
   4.2 Local Geology 3
   4.3 Regional Hydrogeology 4
   4.4 Local Hydrogeology 4
5. PROPOSED REMEDIAL ACTION 4
   5.1 SME Flow-Through Barrier Design 5
      5.1.1 Air Injection 5
      5.1.2 Biogenic-Gas Extraction 6
      5.1.3 Nutrient Injection 7
      5.1.4 Surface Seal 7
      5.1.5 Groundwater Monitoring Wells 7
      5.1.6 Equipment Enclosures 8
      5.1.7 Monitoring 8
6. REPORT PREPARATION 8
7. SCHEDULE 9
8. REFERENCES 9

Figures
Figure 1 – Site Location Map
Figure 2 – Site Map
Figure 3 – Site Detail Map with Proposed Flow-Through Barrier System
Figure 4 – Air and Nutrient Injection Well Construction Diagram
Figure 5 – Biogenic-Gas Extraction Well Construction Diagram
Figure 6 – SME Piping and Instrumentation Diagram
Figure 7 – Barrier Monitoring Well Construction Diagram

Appendices

Appendix A - SME Equipment Specifications

COMMON ABBREVIATIONS

°C	Degrees Celsius
°F	Degrees Fahrenheit
95UCL	95 percent upper confidence limit
AA&A	Ami Adini & Associates, Inc.
AOC	Area of concern
AOPC	Area of potential concern
APN	Assessor's parcel number
AQMD	Air Quality Management District (South Coast)
ARAR	Applicable, relevant or appropriate requirement
AST	Aboveground storage tank
ASTM	American Society for Testing and Materials
bgs	Below ground surface
BOD	Biochemical oxygen demand
BGE	Biogenic gas extraction
BTEX	Benzene, toluene, ethylbenzene, and xylenes
Cal/EPA	California Environmental Protection Agency
CAP	Corrective action plan
CCR	California Code of Regulations
CCRWQCB	Central Coast Regional Water Quality Control Board
CEQA	California Environmental Quality Act
CERCLA	Comprehensive Environmental Response, Compensation & Liability Act
cfm	Cubic feet per minute
CFR	Code of Federal Regulations
CH_4	Methane
CHHSLs	California Human Health Screening Levels
COC	Chain of custody
COC	Chemical of concern
COPC	Chemical of potential concern
CRRWQCB	Colorado River Regional Water Quality Control Board
CSF	Cancer slope factor
CSM	Conceptual site model
CUPA	Certified Unified Program Agency
CWA	Clean Water Act
DAF	Dilution-attenuation factor
DCA	Dichloroethane
DCE	Dichloroethene or dichloroethylene
DDD	Dichloro-diphenyl-dichloroethane
DDE	Dichloro-diphenyl-dichloroethene
DDT	Dichloro-diphenyl-trichloroethane
DHS	Department of Health Services
DIPE	Di-isopropyl ether
DNAPL	Dense non-aqueous-phase liquid
DO	Dissolved oxygen
DOT	Department of Transportation
DPE	Dual-phase extraction
DPT	Direct-push drilling technology
DQO	Data quality objective
DRO	Diesel range organics
DTSC	Department of Toxic Substances Control
DWR	California Department of Water Resources
EB	Equipment blank
EPA	U.S. Environmental Protection Agency
EQL	Estimated quantitation limit (also LDL & PQL)
ESA	Environmental site assessment
ESL	Environmental screening level
ETBE	Ethyl tertiary butyl ether
ft	Foot or feet
GC/MS	Gas chromatography/mass spectrometry
GRO	Gasoline range organics
GW	Groundwater well
GWM	Groundwater monitoring well
H_2S	Hydrogen sulfide
HAZWOPER	Hazardous waste operations and emergency response
HDPE	High-density polyethylene
HHRA	Human health risk assessment
HHSE	Human health screening evaluation
HI	Hazard index
HQ	Hazard quotient
HRC	Hydrogen-releasing compound
HSA	Hollow-stem auger
HSC	Health and Safety Code
HSP	Health and safety plan
HVDPE	High-vacuum dual-phase extraction
HVOC	Halogenated volatile organic compound
IDW	Investigation-derived waste
J "flag"	Chemical detected below LDL, EQL or PQL
kg	Kilogram
K_{OC}	Organic carbon partition coefficient
LACDHS	Los Angeles County Department of Health Services
LACDPW	Los Angeles County Department of Public Works
LACFD	Los Angeles County Fire Department
LADD	Lifetime average daily dose
LADRP	Los Angeles Department of Regional Planning
LADPW	Los Angeles Department of Public Works
LAFD	Los Angeles City Fire Department

LARWQCB	Los Angeles Regional Water Quality Control Board
LDL	Laboratory detection limit (also EQL and PQL)
LNAPL	Light non-aqueous-phase liquid
LRWQCB	Lahontan Regional Water Quality Control Board
LUST	Leaking underground storage tank
M,p-xylene	Meta, para-xylene
MDL	Method detection limit
MEK	Methyl ethyl ketone (or 2-butanone)
mg/kg	Milligrams per kilogram
mg/L	Milligrams per liter
MNA	Monitored natural attenuation
mph	Miles per hour
MSL	Mean sea level
MSSL	Maximum soil screening level (LARWQCB)
MTBE	Methyl tertiary butyl ether
mV	Millivolt
MW	Monitoring well
MWD	Metropolitan Water District
NA	Not applicable
ND	Not detected at or above method detection limit
NE	Not established
NFA	No further action
NPDES	National Pollution Discharge Elimination System
NPL	National Priority List
NS	Not sampled
NTU	Nephelometric turbidity unit
o-xylene	Ortho-xylene
O&G	Oil and grease
OCHCA	Orange County Health Care Agency
OCWD	Orange County Water District
OEHHA	Office of Health Hazard Assessment
ORP	Oxidation reduction potential
OSHA	Occupational Safety and Health Administration
PAHs	Poly-aromatic hydrocarbons
PCBs	Polychlorinated biphenyls
PCE	Perchloroethene, perchloroethylene, tetrachloroethene, tetrachloroethylene or “perc”
PDF	Portable document format
PE	Professional Engineer
PEA	Preliminary endangerment assessment or preliminary environmental assessment
PG	Professional Geologist
PID	Photo-ionization detector
ppb	Parts per billion
ppbv	Parts per billion by volume
PPE	Personal protective equipment
ppm	Parts per million
ppmv	Parts per million by volume
PQL	Practical quantitation limit (also EQL and LDL)
PRP	Potentially responsible party
QA/QC	Quality assurance/quality control
QAPP	Quality assurance project plan
QC	Quality control
RAP	Remedial action plan
RCRA	Resource Conservation and Recovery Act
REC	Recognized environmental condition
REL	Reference exposure level
RfD	Reference dose
RI/FS	Remedial investigation/feasibility study
RL	Reporting limit
RME	Reasonable maximum exposure
RP	Responsible party
RSL	Regional soil screening level (EPA)
RWQCB	Regional Water Quality Control Board
SAP	Sampling and analysis plan
SARA	Superfund Amendments & Reauthorization Act
SARWQCB	Santa Ana Regional Water Quality Control Board
Scfm	Standard cubic feet per minute
SCM	Site Conceptual Model
SDRWQCB	San Diego Regional Water Quality Control Board
SFBRWQCB	San Francisco Bay Regional Water Quality Control Board
sgr	Silica gel rinse
SGS	Soil-gas survey
SHSP	Site-specific health and safety plan
SIC	Standard Industrial Classification
SLIC	Spills, Leaks, Investigation and Cleanup
SLOCEHD	San Luis Obispo County Environmental Health Department
SMCHS	San Mateo County Health System
SME	Subsurface metabolic enhancement
SPCC	Spill prevention control and countermeasure
SSL	Soil screening level
STLC	Soluble threshold limit concentration
SVE	Soil vapor extraction
SVOC	Semi-volatile organic compound
SWPPP	Storm water pollution prevention plan
SWRCB	State Water Resources Control Board
TAME	Tertiary amyl methyl ether
TB	Trip blank
TBA	Tertiary butyl alcohol (or tert-butanol)
TCA	Trichloroethane
TCE	Trichloroethene or trichloroethylene
TCLP	Toxic characteristic leaching procedure
TDS	Total dissolved solids
TMB	Trimethylbenzene

TOC	Total organic carbon
TPCA	Toxic Pit Cleanup Act
TPH	Total petroleum hydrocarbons
TPHcc	Total petroleum hydrocarbons carbon chain
TPHd	Total petroleum hydrocarbons as diesel
TPHg	Total petroleum hydrocarbons as gasoline
TPHo	Total petroleum hydrocarbons as oil
TRPH	Total recoverable petroleum hydrocarbons
TSCA	Toxic Substances Control Act
TSS	Total suspended solids
TTLC	Total threshold limit concentration
USA	Underground Service Alert
USCS	Unified Soils Classification System
USDA	U.S. Department of Agriculture
USEPA	U.S. Environmental Protection Agency
USGS	U.S. Geologic Survey
UST	Underground storage tank
USTCF	Underground Storage Tank Cleanup Fund
VCP	Voluntary Cleanup Program
VES	Vapor extraction system
VET	Vapor extraction test
VOC	Volatile organic compound
WDR	Waste discharge requirement
WET	Waste extraction test
WIP	Well Investigation Program
WRD	Water Replenishment District of Southern California
µg/kg	Micrograms per kilogram
µg/L	Micrograms per liter
$\mu g/m^3$	Micrograms per cubic meter

PROFESSIONAL CERTIFICATION

This *Interim Remedial Action* Plan has been prepared by

Matthew deHaas, PG
Senior Geologist
Professional Geologist

under the professional review and quality control of

Gabriele Baader, PG
Director of Environmental Engineering
Professional Geologist

and approved by

Ami Adini
President, Principal Environmental Consultant
NREP Registered Environmental Professional No. 2614
General Engineering/Hazardous Waste Contractor No. 587540
B. Sc. Mech. Eng.

THIRD-PARTY LIABILITY DISCLAIMER

This document, which is the work product of Ami Adini & Associates, Inc. (AA&A), has been produced in accordance with a specific contract between AA&A and its client, who is represented by the party to whom this document is addressed. The services described in this document were performed in a manner consistent with AA&A's agreement with the client and in accordance with generally accepted professional consulting principles and practices. This document is the product for the sole use and benefit of the contracting client. It creates no rights or benefits to parties other than the client and AA&A, except such other rights as are specifically called for herein.

AA&A consents to the release of this document to third parties at the discretion of the client. However, any use of or reliance upon this information by a party other than the client shall be solely at the risk of such third party and without legal recourse against AA&A, its affiliates, associates, employees, officers, or directors, regardless of whether the action in which recovery of the damage is sought is based upon contract, tort (including the sole, concurrent or other negligence and strict liability of AA&A), statute or otherwise. This document shall not be used or relied upon by a party that does not agree to be bound by the above statement. This document is valid as of the date shown, and AA&A shall not be held responsible for subsequent changes in physical/chemical/ environmental conditions and/or legislation over which AA&A has no control.

EXECUTIVE SUMMARY

Ami Adini and Associates, Inc. (AA&A), has prepared this *Interim Remedial Action Plan* (IRAP) to present a scope of services to address the remediation of groundwater contamination along the western and southern boundaries of the Former Chemoil Refinery (site) located at 2020 Walnut Avenue in Signal Hill, California 90806.

AA&A prepared this IRAP at the request of the Signal Hill Holding Company (SHHC) to present a scope of services to mitigate petroleum hydrocarbon contaminants identified in groundwater along the western and southern boundaries of the site as required by the Los Angeles Regional Water Quality Control Board. AA&A reviewed options for the remediation of groundwater contamination at the site and evaluated them for effectiveness, efficiency, and economics. The objective of this IRAP is to propose a remedial technology to efficiently and economically address the mitigation of groundwater contamination along the western and southern boundaries of the site.

The selected technology to treat groundwater contamination along the western and southern boundaries of the site is a flow-through barrier using subsurface metabolic enhancement (SME). SME (U.S. patent no. 6,464,005) technology is an in-situ process of soil and groundwater remediation that uses natural micoorganisms found natively in soil to degrade petroleum hydrocarbons. SME technology incorporates the technologies of biosparging, nutrient injection, air injection, and air and biogenic-gas extraction. Using a combination of air and nutrient injection into the subsurface through a series of injection wells and the extraction of air and biogenic gas from a series of extraction wells, oxygen flow throughout the subsurface is enhanced. The increased circulation of oxygen and nutrients in the subsurface stimulates the aerobic metabolism of petroleum hydrocarbons by naturally occurring, native microbes in the soil. Extraction of biogenic gas, primarily carbon dioxide, prevents anaerobic conditions from developing in the subsurface, promotes the natural metabolism of petroleum hydrocarbons, and maintains a negative pressure in the subsurface, which promotes the flow and spread of injected air and nutrients throughout the area of contamination. SME technology addresses soil and groundwater contamination simultaneously and is also effective in treating hydrocarbon contamination above and below the groundwater table.

Remediation at the site using a SME flow-through barrier can reduce contaminant concentrations to levels not economically attainable using dual-phase extraction (DPE) or other remedial technologies. As equipment to conduct SME is used to promote the circulation of oxygen and nutrients through the subsurface, the equipment operates at significantly lower flow rates than those of DPE equipment and is less expensive to operate.

SME technology is capable of addressing remediation of the remaining groundwater contamination at the site before migrating off-site more quickly and efficiently than other available technologies. A SME flow-through barrier appears to be an appropriate economical technology to remediate groundwater contamination along the western and southern portions of the site.

Use of SME technology requires by law that the patent number (U.S. patent no. 6,464,005) be included.

1. INTRODUCTION

Ami Adini & Associates, Inc. (AA&A), has prepared this *Interim Remedial Action Plan* (IRAP) to present a scope of services to address the remediation of groundwater contamination along the western and southern boundaries of the Former Chemoil Refinery (site) located at 2020 Walnut Avenue in Signal Hill, California 90806, (Figures 1 and 2). The IRAP includes a summary of previous work and provides a plan for remediation of groundwater at the site.

1.1 Objective

AA&A prepared this IRAP at the request of the Signal Hill Holding Company (SHHC) to present a scope of services to mitigate petroleum hydrocarbon contaminants identified in groundwater along the western and southern boundaries of the site as required by the Los Angeles Regional Water Quality Control Board (LARWQCB). AA&A reviewed options for the remediation of groundwater contamination at the site and evaluated them for effectiveness, efficiency, and economics. The objective of this IRAP is to propose a remedial technology to efficiently and economically address the mitigation of groundwater contamination along the western and southern boundaries of the site.

2. BACKGROUND AND SITE HISTORY

The site is a former oil refinery that operated from 1922 to early 1994. The Chemoil Corporation (Chemoil) acquired the refinery in August 1988 and operated it until February 1994. Prior to being acquired by Chemoil, the refinery was owned and operated by the MacMillan-Ring Free Oil Company. According to the *Additional Off-Site Environmental Investigation Report*, dated July 11, 2012, prepared by Geosyntec Consultants, of Oakland California, the refinery and associated equipment were dismantled and removed between 1997 and 1998 (Geosyntec, 2012). The site is currently vacant and does not contain any aboveground or underground storage tanks.

The site address is 2020 Walnut Avenue in Signal Hill, California, and comprises a total of 23 parcels identified by the Los Angeles County, Office of the Assessor. The site is divided by Walnut Avenue into two primary parcels, identified as the Eastern and Western parcels. The western parcel is bound by Walnut Avenue to the east, commercial office/light industrial properties to the north, Gundry Avenue to the west, and a former railway corridor parallel to East Wesley Drive to the southwest. Residential properties are located south and west of the former railway corridor south of the site. The eastern parcel is bound by Walnut Avenue to the west, East 20th Street and Alamitos Avenue to the south, North Gaviota Avenue to the east, and the American University of Health Sciences to the north.

2.1 Previous Assessments, Monitoring and Remediation

A summary of previous reports and chronology of pertinent activities included in the *Report on Groundwater Quality Monitoring Program, July 2012*, dated July 15, 2012 prepared by Testa Environmental Corporation (TEC), of Mokelumne Hill, California indicates that several phases of assessment, monitoring and remediation have been conducted at the site dating back to December 1985 (TEC, 2012). The summary prepared by TEC indicates that the initial groundwater monitoring report for the site was prepared in March 1987 and that a proposed remedial action plan was prepared in March 2002. The documents summarized by TEC were not available for review by AA&A at the time of the preparation of this IRAP.

The *Report on Groundwater Quality Monitoring Program, April 2012*, dated April 15, 2012 prepared by TEC, indicates that a light, non-aqueous phase liquid (LNAPL), or free-product, was formerly encountered in four wells

associated with the site; one monitoring well (MW9) and three LNAPL recovery wells (R-4 through R-6). A map included in the TEC report dated April 15, 2012, indicates that LNAPL was formerly present in three areas at the site:

- Pool No. 1, located along the eastern boundary of the western portion of the site, north of East 21 Street, in the vicinity of former LNAPL recovery well R-4, and vicinity of current monitoring wells MW9 and MW11;
- Pool No. 2, located along the western boundary of the western portion of the site, in the vicinity of former LNAPL recovery well R-5, and vicinity of current monitoring well MW12; and
- Pool No.3, located in the southern-most corner of the site near the intersection of Walnut Avenue and East Wesley Drive, in the vicinity of former LNAPL recovery well R-6, and up-gradient of current monitoring well MW14.

A LNAPL recovery program was implemented in March 1986 and approximately 27.9 barrels of LNAPL were recovered by December 1994. Although the volume of a barrel was not reported in the TEC summary, the generally accepted volume is 42 gallons, suggesting that approximately 1,171.8 gallons of LNAPL were recovered between March 1986 and December 1994. The LNAPL recovery wells were abandoned in 2009. The April and July 2012 reports prepared by TEC do not indicate if additional remediation has been conducted after 1994.

3. GROUNDWATER MONITORING

The most recent groundwater monitoring event was completed in June 2012, by TEC. Based upon a review of the *Report on Groundwater Quality Monitoring Program, July 2012*, dated July 15, 2012 prepared by TEC, AA&A provides the following conclusions regarding groundwater conditions:

- Groundwater elevations ranged from 4.99 (MW-2) to 6.82 (MW-3) feet above mean sea level (MSL);
- Depth to groundwater ranged from 11.30 (MW-19) to 41.20 (MW-3) feet below ground surface (bgs);
- Groundwater flow was generally toward the south with an approximate gradient of 0.003 to 0.006 feet per foot (ft/ft);
- No free product was encountered in any of the monitoring wells associated with the site;
- Gasoline range organics (GRO) were reported in water samples collected from 12 of 16 wells with a maximum concentration of 15,000 micrograms per liter (µg/L) reported in the sample collected from MW-9;
- Concentrations of GRO along the western site boundary ranged from 600 µg/L (MW1A) to 7,000 µg/L (MW12);
- Concentrations of GRO along the southern site boundary ranged from 90 µg/L (MW1) to 510 µg/L (MW13);
- Diesel range organics (DRO) were reported in water samples collected from all wells with a maximum concentration of 17,000 µg/L reported in the sample collected from MW-11;
- DRO using the silica gel rinse (sgr) method was reported in 11 of 16 wells with a maximum concentration of 3,300 µg/L reported in the sample collected from well MW-11 (Use of the sgr method removes polar non-petroleum hydrocarbons from the analysis resulting in a total petroleum measurement whereas the standard analysis results in a total organic measurement.);
- Concentrations of DROsgr along the western site boundary ranged from 260 µg/L (MW1A) to 2,000 µg/L (MW12);

- Concentrations of DROsgr along the southern site boundary ranged from 260 µg/L (MW1) to 1,300 µg/L (MW13);
- Benzene was reported at concentrations of 43 and 1.6 µg/L in wells MW-9 and MW-12, respectively (These wells are located along the eastern and western boundaries of the northern part of the western portion of the site.);
- Benzene was not reported in any of the off-site monitoring wells with the exception of MW-12 (1.6 µg/L), located along the western site boundary;
- MTBE was reported at a concentration of 180 µg/L in well MW-17 (located off-site to the west of the western boundary of the western portion of the site);
- Dissolved-phase hydrocarbons exist beneath the site and have migrated off-site to the east beneath Walnut Avenue, to the west beneath Gundry Avenue, and to the south;
- An off-site source for MTBE and possibly other constituents is inferred west, or northwest, of the site, with contaminants migrating toward the south and east; and
- Based on the results of the most recent groundwater monitoring event, migration of contaminants off-site appears to be limited to GRO and DRO.

4. GEOLOGY / HYRDOGEOLOGY

4.1 Regional Geology

The site is located in the Los Angeles Basin, part of the Coastal Plain of Los Angeles County. The Coastal Plain is in the northwest corner of the Peninsular Range geomorphic province, which extends southward into San Diego County and Baja California. The Peninsular Range province consists of generally northerly- and northwesterly-trending mountain ranges and associated valleys. To the north of this province is the Transverse Range province, which consists of east- to west-trending mountains, including the Santa Monica and San Gabriel Mountains (California Department of Water Resources [DWR], 1961).

A northwest structural trend is evident in many folding and faulting features of the regional geology, characteristic of the Peninsular Ranges geomorphic province. These include the Newport–Inglewood Fault Zone, the Paramount Syncline, the Dominguez Anticline, the Gardena Syncline, the Wilmington Anticline, and the Wilmington Syncline. Geologic units of the northern Peninsula Ranges province consist of Jurassic- and Cretaceous-age basement rocks overlain by as much as 32,000 feet of marine and non-marine sedimentary strata ranging in age from the late Cretaceous to Holocene epochs. Characteristic of the southwestern block of the Los Angeles Basin is the basement rock referred to as the Catalina Schist. The nearly ubiquitous presence of this Cretaceous schist as a basement rock in the region indicates that the Newport–Inglewood Fault Zone may have been a boundary between oceanic and continental crusts, separated by a subduction zone at that boundary (Barrows, 1974).

The Newport–Inglewood–Rose Canyon fault zone is located approximately 0.25-miles northeast of the site.

4.2 Local Geology

According to the *Geologic Map of California, Long Beach Sheet* (USGS, 1962), the site is situated on Quaternary non-marine terrace deposits. Based upon a review of available historical site documents presenting site assessment activities dating back to 1987 the site appears to be generally underlain with non-continuous intervals of sandy silt and silty sand with various distributions of grain size and sand to silt ratios to 45 feet bgs. Clay, clayey silt, and/or clayey sand have been reported in several borings at thicknesses ranging from 1 to 20 feet thick, but do not appear to constitute a continuous confining layer at the site.

4.3 Regional Hydrogeology

The site is located within the West Coast sub-basin of the Central Plain of Los Angeles groundwater basin. The basin is identified as Basin Number 4-11.03 by the DWR in the *California's Groundwater Bulletin 118* (last updated February 27, 2004). According to the DWR, the surface area of the sub-basin is 142 square miles. The sub-basin is bound to the north by the Ballona Escarpment, to the east by the Newport-Inglewood fault zone, and the Pacific Ocean and consolidated rock of the Palos Verdes Hills on the south and west. Water bearing formations in the sub-basin generally consist of Holocene, Pleistocene, and Pliocene age unconsolidated and semi-consolidated marine and alluvial sediments. The primary aquifier in the sub-basin is the Silverado aquifer, estimated to be 500 feet thick with a storage capacity of 6.5 million acre-feet (DWR, 2004).

Records available from the County of Los Angeles Department of Public Works (LADPW) well information website (http://dpw.lacounty.gov/general/wells/#), indicate that the nearest production well, identified as Well ID 420 (State No. 4S12W30R01) is located approximately 850 feet south of the southernmost property boundary of the site. The LADWP lists the well as active with the most recent measurement date of October 7, 2008; the depth to groundwater was 56.60 feet bgs with a water surface elevation of -40.60 feet bgs. The first measurement of the well was recorded on June 29, 1960, with a depth to water of 93.10 feet bgs. Depth to water in the well has ranged from 56.20 (April 2004) to 98.90 (November 1977) feet bgs.

4.4 Local Hydrogeology

Groundwater monitoring at the site began in March 1987. Since the initial monitoring event, groundwater elevations have remained relatively consistent. In June 2012, groundwater elevations ranged from 4.99 (MW-2) to 6.82 (MW-3) feet above MSL. Since the initial monitoring event, less than 7 feet have separated the highest groundwater elevation measurements from the lowest measurements in the site wells.

During the groundwater monitoring event conducted in June 2012, the average groundwater elevation was 5.91 feet above MSL; 1.83 feet separated the highest and lowest measurements. The average depth to groundwater was approximately 26.25 feet bgs. Due to site topography the difference between the depth to water measurements in the monitoring wells is 29.90 feet. Groundwater flow was determined to be toward the south at an approximate gradient of 0.003 to 0.006 ft/ft.

The topographic gradient at the site is toward the south. The elevation of the southeast corner of the western portion of the site is approximately 25 feet above MSL, approximately 25 feet lower than the northeast corner of the western portion of the site. The approximate elevations of the southern and northern boundaries of the eastern portion of the site are 28 and 42 feet above MSL, respectively.

5. PROPOSED REMEDIAL ACTION

The selected technology to treat groundwater contamination along the western and southern boundaries of the site is a flow-through barrier using subsurface metabolic enhancement (SME). SME (U.S. patent no. 6,464,005) is an in-situ bioremediation process of soil and groundwater remediation that uses natural micoorganisms found natively in soil to degrade petroleum hydrocarbons. SME technology incorporates the technologies of biosparging, nutrient injection, air injection, and air and biogenic-gas extraction (BGE). Using a combination of air and nutrient injection into the subsurface through a series of injection wells, and the extraction of air and biogenic gas from a series of extraction wells, oxygen flow throughout the subsurface is stimulated. The increased circulation of oxygen and nutrients into the subsurface stimulates the aerobic metabolism of petroleum hydrocarbons by naturally occurring, native microbes in the soil. Accumulation of carbon dioxide in the subsurface prevents bacterial growth. Extraction of biogenic gas, primarily carbon dioxide, prevents the

subsurface from becoming anaerobic, promotes the natural metabolism of petroleum hydrocarbons, and maintains a negative pressure in the subsurface, which promotes the flow and spread of injected air and nutrients throughout the area of contamination.

SME technology injects nutrients in batched intervals several weeks to months between injections to allow the nutrients to disperse throughout the subsurface. Because low-flow air injection, between 20 and 40 cubic feet per hour, is used to provide oxygen to the subsurface, and air and vapor extraction is performed at approximately two to ten times the injection rate, equipment required to conduct SME is significantly less expensive to operate than typical air sparge and/or vapor and dual-phase extraction (DPE) equipment.

SME technology is effective in remediating petroleum hydrocarbon contamination in soil and groundwater simultaneously and requires minimal equipment when compared to other active technologies. In the flow-through barrier zone, the SME technology is expected to reduce the contaminant concentrations to target levels in 18 to 24 months.

SME relies on in-situ hydrocarbon destruction and bioremediation, as opposed to mechanical extraction. Case studies of the use, application, and effectiveness of SME technology at sites with petroleum hydrocarbon and chlorinated solvent contamination are available and can be provided at the request of SHHC and/or the LARWQCB.

The goal of this remedial action is to maximize the reduction of contaminant concentration in the groundwater throughout the flow-through barrier zone to practicable, low, economically attainable levels. Table 1 presents the proposed remediation goals for groundwater along the south and southwest site boundaries.

Table 1

Contaminant	Current Maximum Concentration in Groundwater (June 2012; µg/L)	Remediation Goals for Groundwater (µg/L)
GRO	15,000	100
DROsgr	3,300	100

GRO – Gasoline range organics

DROsgr – Diesel range organics using silica gel rinse

5.1 SME Flow-Through Barrier Design

SME flow-through barrier technology comprises five primary components: air injection, BGE, nutrient injection, a surface seal, and groundwater monitoring wells. The proposed SME system will consist of a network of 95 air/nutrient injection wells, 47 BGE wells, a surface seal, and 12 groundwater monitoring wells. Typical air/nutrient injection and extraction wells associated with SME can be installed using direct-push drilling technology. A map illustrating the proposed locations and arrangement of the well network and surface seal is provided as Figure 3. The number and arrangement of air injection, BGE, and nutrient injection wells may be modified as site conditions are more thoroughly assessed.

5.1.1 Air Injection

The network of air injection points will be divided into eight circuits. Four injection circuits (IC1 through IC4) will be installed on the southern portion of the site and four injection circuits (IC5 through IC8) will be installed on the northern portion of the site. Air injection points will be constructed in the same borings as the nutrient injection wells using 0.25-inch-diameter nylon or polyethylene tubing connected to a 6-inch-long section of stainless steel or PVC well screen. Historical groundwater measurements indicate that the depth to water in the

site monitoring wells in the vicinity of the south and southwest property boundaries ranges from approximately 15 feet to 25 feet bgs. The screened portion of the air injection points will be installed at depths between approximately 30 and 35 feet bgs. A well construction diagram for the proposed air injection point/nutrient injection well is provided as Figure 4.

Two rows of injection circuits will be installed along the western property boundary and two rows of injection circuits will be installed along the southern property boundary. Each of the two rows will be placed approximately 15 feet apart with the first row placed approximately 20 feet from the property boundaries. A map illustrating the configuration of the air injection circuits is provided as Figure 3. The number, arrangement, and construction of the air injection wells may be modified as site conditions are more thoroughly assessed.

Air injection will be completed using four stationary, 2.9-horsepower, 100 percent oil-less, rotary-vane, Becker DX4.4K, or equivalent, air compressors operating at approximately 28 standard cubic feet per minute each to inject oxygen into the subsurface through the network of air injection wells. Specifications for the proposed air compressor are provided in Appendix A.

5.1.2 Biogenic-Gas Extraction

Biogenic gas is extracted from the subsurface to promote the circulation of oxygen and prevent the accumulation of carbon dioxide. The metabolic activity of subsurface microbes decreases as conditions become anaerobic. Vapor samples of the extracted biogenic gas will be analyzed for oxygen and carbon dioxide content to verify that subsurface conditions stay aerobic and maintain the optimum ratio of oxygen and carbon dioxide. Composite samples of the extracted gases will be collected prior to the point of discharge to the atmosphere during the initial startup, monthly during the first quarter of operation, and quarterly thereafter.

The network of BGE wells will be divided into four circuits. Two BGE circuits (EC1 and EC2) will be installed on the southern portion of the site and two BGE circuits (EC3 and EC4) will be installed on the northern portion of the site. BGE wells will be constructed using 1-inch-diameter, Schedule 40 PVC blank and 0.020-inch-slot screen material. Historical groundwater measurements indicate that the depth to water in the site monitoring wells in the vicinity of the south and southwest property boundaries ranges from approximately 15 feet to 25 feet bgs. To prevent submerging the BGE wells, AA&A plans to construct the BGE wells with the screened portion of the well extending from 10 to 15 feet bgs. A well construction diagram for the proposed BGE wells is provided as Figure 5. The number, arrangement, and construction of the air injection wells may be modified as site conditions are more thoroughly assessed.

A single row of BGE circuits will be installed along the western property boundary and a single row on BGE circuits will be installed along the southern property boundary. Each row of BGE wells will be placed between the two rows of injection circuits. A map illustrating the configuration of the air injection and BGE circuits is provided as Figure 3.

BGE will be performed using four, 2-horsepower Gast R5125Q-50, or equivalent, regenerative blowers capable of applying up to 60 inches of water vacuum and approximately 160 cubic feet per minute (cfm) to the network of BGE wells to remove carbon dioxide and promote the circulation of oxygen in the subsurface. Specifications for the proposed blower are provided in Appendix A.

If necessary, a permit to operate (PTO) will be obtained from the South Coast Air Quality Management District (SCAQMD), and extracted soil vapor treatment will be provided by granular activated carbon canisters. Additional blowers may be added to the vapor treatment system as needed to adequately process and treat the extracted biogenic gas through the carbon canisters. If required, vapor samples will be collected at a point prior to

discharge to the atmosphere and analyzed for benzene, toluene, ethylbenzene, and total xylenes by EPA Method 8021 and GRO by EPA Method 8015. Vapor samples will be collected at intervals and locations specified by the SCAQMD to ensure that emitted gasses adhere to permit conditions. A piping and instrumentation diagram illustrating the configuration of the wells, equipment, and instrumentation associated with the SME system is provided as Figure 6.

5.1.3 Nutrient Injection

Nutrients are injected into the subsurface to maintain optimum ratios of carbon to nitrogen to phosphorus. As microbial metabolism of hydrocarbons occurs, nutrients such as nitrate and phosphorus are depleted. Nitrogen sources such as ammonia, nitrate, and urea may be used to replace nutrients depleted during metabolism. A solution of urea and/or ammonium sulfate is proposed for use to maintain nitrate concentrations. Nitrate concentrations will be monitored and maintained at or below a concentration of 2 milligrams per liter until it is clear that the hydrocarbon mass is being consumed; at that time nitrate injections will cease. Phosphorus sources such as phosphoric acid or super-treble phosphate may be used to increase phosphate concentrations in the remediation zone. Prior to injection of any nutrients into the subsurface, authorization will be obtained from the LARWQCB and any necessary Waste Discharge Requirements (WDR) permits will be acquired.

Nutrients will be injected into the subsurface via 95 dedicated injection points constructed in the same borings as the air injection wells. Nutrient injection wells will be constructed using 0.75-inch-diameter, Schedule 80 PVC blank and 0.020-inch-slot screen material. Historical groundwater measurements indicate that the depth to water in the site monitoring wells in the vicinity of the south and southwest property boundaries ranges from approximately 15 feet to 25 feet bgs. To minimize the potential for submerging the screened interval of the nutrient injection wells, the wells will be constructed with the screened interval extending from 5 feet to 15 feet bgs. The proposed construction of the nutrient injection wells may be altered in the field due to field conditions and observations. Each nutrient injection point will be individually piped to a distribution location within a sealed equipment enclosure.

As nutrient injection wells and air injection points are constructed in the same borehole, the arrangement of nutrient injection wells is the same as the air injection points.

5.1.4 Surface Seal

SME relies upon the circulation of air and nutrients in the subsurface along with the removal of carbon dioxide rich biogenic gas. Sealing of the surface is required to promote the circulation of air and nutrients in the subsurface between the air injection points and BGE wells. The surface seal also increases the radius of influence of SME by reducing the potential of air at the surface from being drawn into the BGE wells and effectively short-circuiting the wells.

The surface seal will be completed after the installation of the air/nutrient and BGE wells and associated conveyance piping. The seal will consist of 4 to 10 mils thick polyethylene plastic sheeting and will extend 20 feet beyond the locations of the of the air/nutrient injection circuits. After placement, the polyethylene plastic sheeting will be covered with an approximately 6-inch thick layer of cover material to prevent damage to the seal. The cover material will be obtained from the site. The location of the surface seal is shown on Figure 3.

5.1.5 Groundwater Monitoring Wells

To monitor groundwater conditions and evaluate the effectiveness of the SME flow-through barrier, AA&A proposes to install 12 monitoring wells located along the approximate center line of the flow-through barrier. The wells will be constructed of 1.5-inch-diameter, prepack schedule 40, PVC well materials and installed using a

direct-push drill rig. The wells will be constructed with the screened portion of the wells extending from approximately 10 to 25 feet bgs. Due to the elevation changes observed between the southern and northern portions of the site, well construction details will vary amongst the wells. The well construction will be modified in the field to construct the wells with approximately 5 feet of screen above the groundwater surface and 10 feet of screen below. The locations of the proposed monitoring wells are shown on Figure 3. A well construction diagram for the proposed monitoring wells is provided as Figure 7.

A groundwater monitoring event will be conducted prior to initial operations of the SME system to provide a baseline of conditions prior to remediation. Subsequent monitoring events will be completed after approximately one month, two months, and three months after initial SME system operations. A monitoring event will be completed after approximately six months after initial operations and at approximate six month intervals for up to two years from the initial operation of SME flow-through barrier system.

5.1.6 Equipment Enclosures

Physical equipment associated with the SME flow-through barrier system will be installed in sealed, lockable enclosures to minimize noise and provide security for the equipment. A map illustrating the proposed locations and arrangement of the well network is provided as Figure 3. The number and arrangement of air injection, BGE, and nutrient injection wells may be modified as site conditions are more thoroughly assessed.

5.1.7 Monitoring

Although the emphasis of this work is to degrade as much hydrocarbon mass as possible, AA&A will also measure important subsurface parameters to quantify the effectiveness of subsurface metabolic enhancement. During system operations, the injection and extraction flow rates and applied vacuum will be measured along with the pressure and/or vacuum response in the surrounding monitoring wells to confirm an adequate zone of air circulation. Concentrations of oxygen, carbon dioxide, and volatile organic compounds in the extracted biogenic gas will be measured and used to evaluate the effectiveness of SME. Extracted oxygen concentrations will be compared to baseline oxygen concentrations, as depressed oxygen concentrations indicate oxygen is being consumed during the metabolic process. Carbon dioxide concentrations approaching zero are an indication that the energy source of hydrocarbons is being depleted.

Concentrations of dissolved oxygen and carbon dioxide will also be measure in groundwater samples collected from the barrier monitoring wells.

6. REPORT PREPARATION

Upon completion of the SME system installation and one month of initial system operation, AA&A will prepare a report detailing the installation and initial operation. Prior to system startup, site characteristics such as depth to groundwater, dissolved oxygen, pH, and oxidation-reduction potential will be monitored in selected wells. The data from the installation and initial operations will be summarized and presented in a remediation installation and initial operations report. The report will present the field data, laboratory results, and calculations as well as recommendations for additional work. We expect that this remedial action will significantly improve the subsurface conditions across the site.

The report will include the following:

- Vicinity, boring, and well location maps;
- Description of field observations, field and laboratory methods, and procedures;

- Summary of field activities including SME installation and startup;
- Laboratory reports and chain-of-custody documentation; and
- Findings, conclusions, and recommendations.

If required, an emissions verification test will be conducted and an associated report prepared and submitted to the SCAQMD. Quarterly or semi-annual progress reports will be prepared as required by the LARWQCB.

7. SCHEDULE

The following schedule is anticipated to complete the proposed scope of work after LARWQCB approval and authorization to proceed has been received:

Interaction with the LARWQCB for approval of this IRAP	As needed
Secure General WDR and/or SCAQMD Permits	As needed
Procure the equipment	1–2 months
Mobilize for field work	2 weeks
Install the system (including monitoring wells)	2 weeks
Start and tune the system	2 weeks
Operate the system (continually, 24 hours per day, 7 days per week)	

AA&A estimates that interactions with the LARWQCB and SCAQMD to expedite the process of obtaining the necessary permits can begin within two weeks of the approval of this IRAP. Fieldwork for the installation of the wells and associated equipment is estimated to commence within two weeks of obtaining the necessary permits.

AA&A estimates that the installation and initial operation of the SME system can be completed in approximately two and one-half to three and one-half months upon receipt of the necessary permits and that contaminant concentrations can be reduced to near the levels presented in Table 1 in 18 to 24 months after SME system installation.

8. REFERENCES

1. Barrows, A.G., *A Review of the Geology and Earthquake History of the Newport-Inglewood Structural Zone, Southern California, California Division Mines and Geology Special Report 114*, 1974.

2. California Department of Water Resources, *California's Groundwater Bulletin 118,* last updated February 27, 2004.

3. County of Los Angeles Department of Public Works (LADPW), *http://dpw.lacounty.gov/general/wells/#*, accessed October 17, 2012.

4. Ellis Environmental, Inc, *Corrective Action Plan Template for SME,* September 22, 2011.

5. Geosyntec Consultants, *Additional Off-Site Environmental Investigation Report*, July 11, 2012.

6. Testa Environmental Corporation (TEC), *Report on Groundwater Quality Monitoring Program, April 2012*, April 15, 2012.

7. TEC, *Report on Groundwater Quality Monitoring Program, July 2012*, July 15, 2012.

8. United States Geological Survey, *Geologic Map of California, Long Beach Sheet*, 1:250,000 scale, 1962.

9. United States Patent and Trademark Office, *United States Patent 6,464,005*, October 15, 2002.

FIGURES

Figures 1 through 7

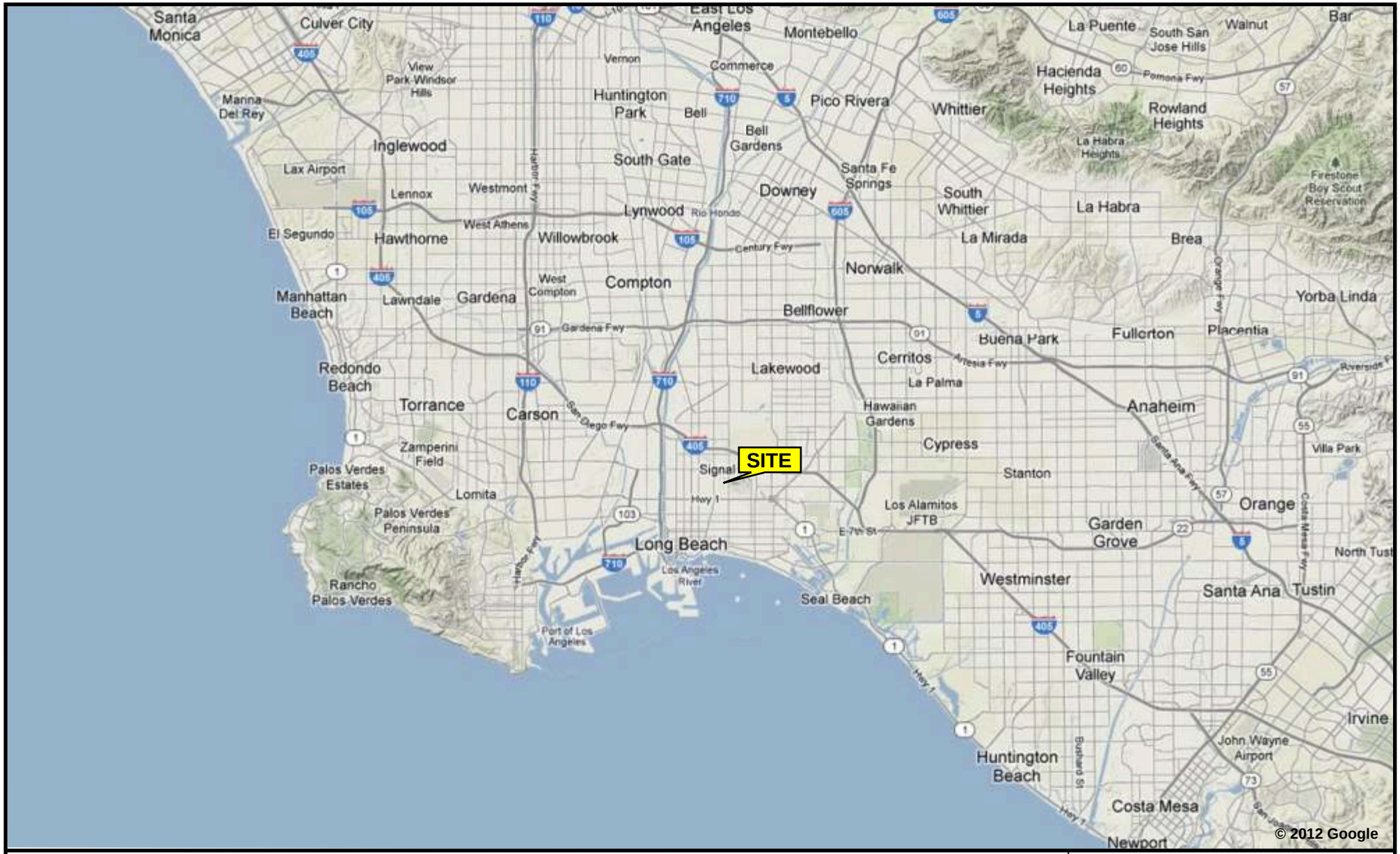

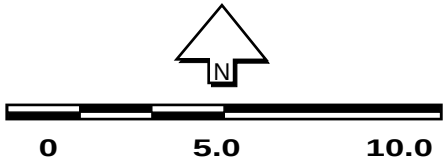

Approximate Scale in Miles

Figure 1: Site Location Map
Former Chem-Oil Refinery
2020 Walnut Avenue
Signal Hill, California

DRAWN BY:	DATE:	PROJECT:
MRd	October 2012	ChemOil.p01

Ami Adini & Associates, Inc.

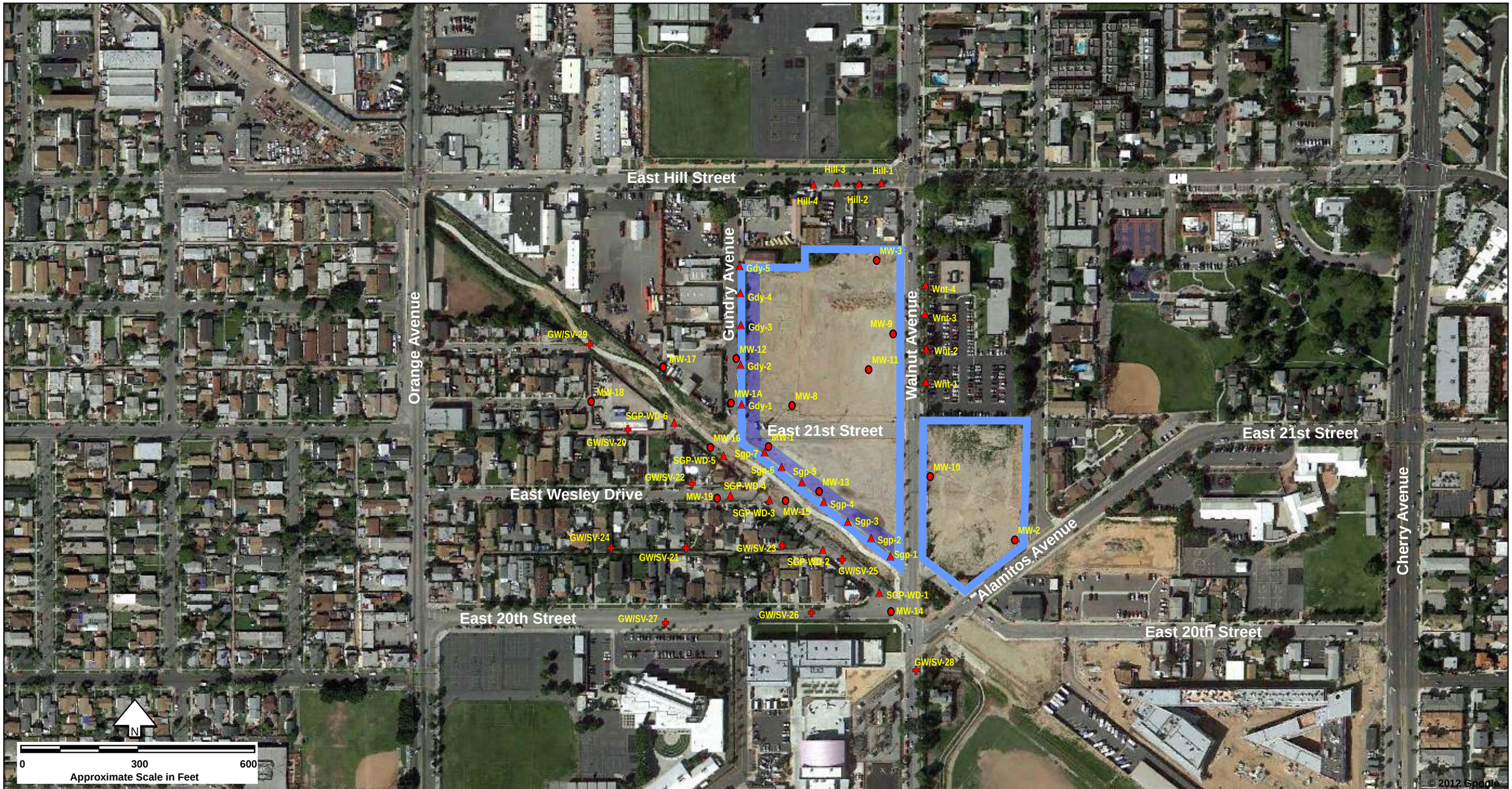

LEGEND

MW-18	Monitoring well
Sgp-7	Soil-gas sample
GW/SV-28	Soil, soil-gas, and groundwater sample
	Property line
	Proposed treatment area

Figure 2: Site Vicinity Map
Former Chem-Oil Refinery
2020 Walnut Avenue
Signal Hill, California

DRAWN BY:	DATE:	PROJECT:
MRd	October 2012	ChemOil.p01

Ami Adini & Associates, Inc.

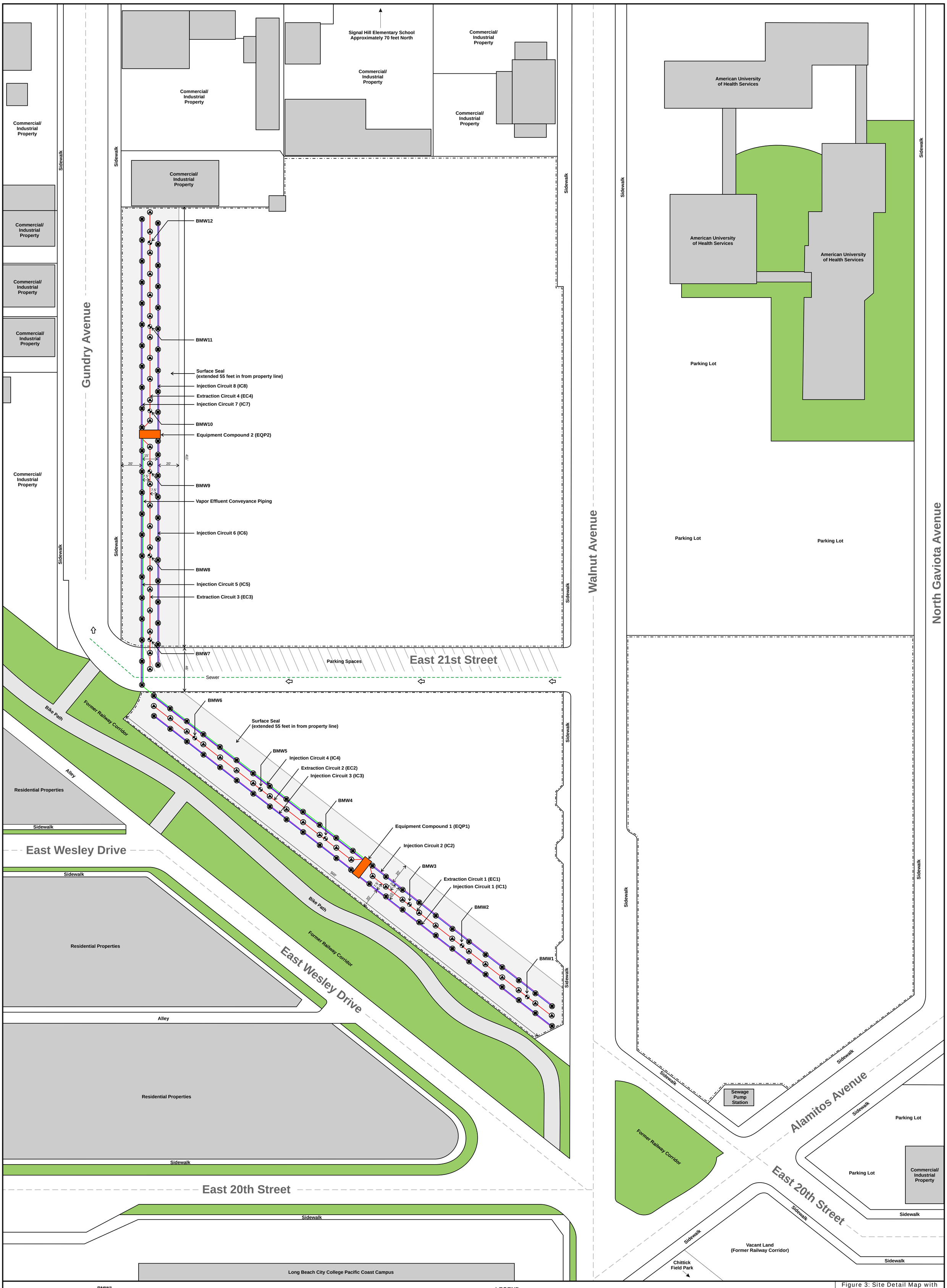

Figure 3: Site Detail Map with Proposed Flow-Through Barrier System

Former Chem-Oil Refinery
2020 Walnut Avenue
Signal Hill, California

DRAWN BY:	DATE:	PROJECT:
SS	October 2012	ChemOil.p01

Ami Adini & Associates, Inc.

Air and Nutrient Injection Well Construction Diagram

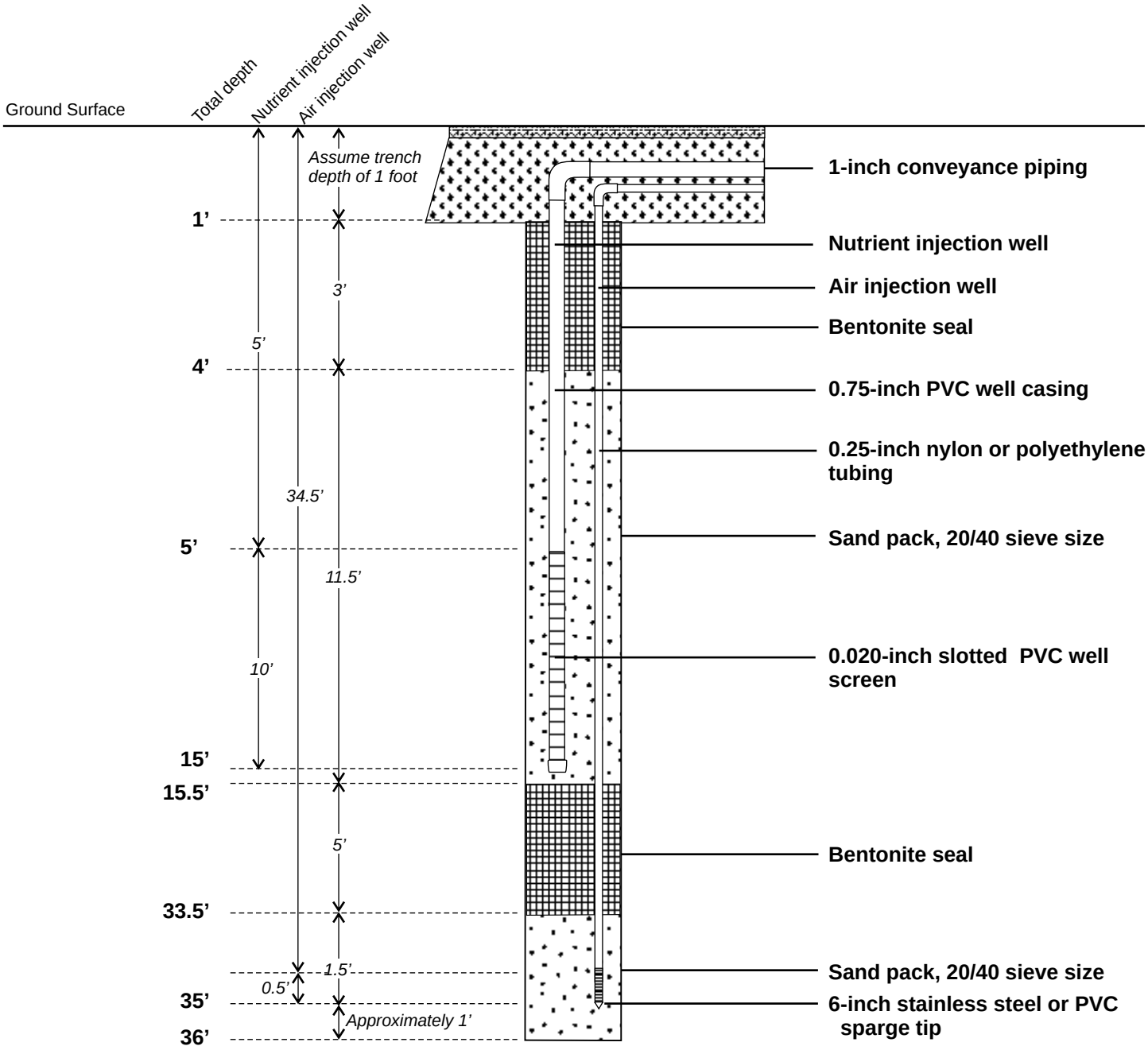

Notes:
1. Diagram not to scale.
2. Well screen depth and length may be adjusted in the field based on lithologic observation and depth of groundwater.

Figure 4: Air and Nutrient Injection Well Construction Diagram
Former Chem-Oil Refinery
2020 Walnut Avenue
Signal Hill, California

DRAWN BY:	DATE:	PROJECT:
MRd	**October 2012**	**ChemOil.p01**

Ami Adini & Associates, Inc.

Biogenic Gas Extraction Well Construction Diagram

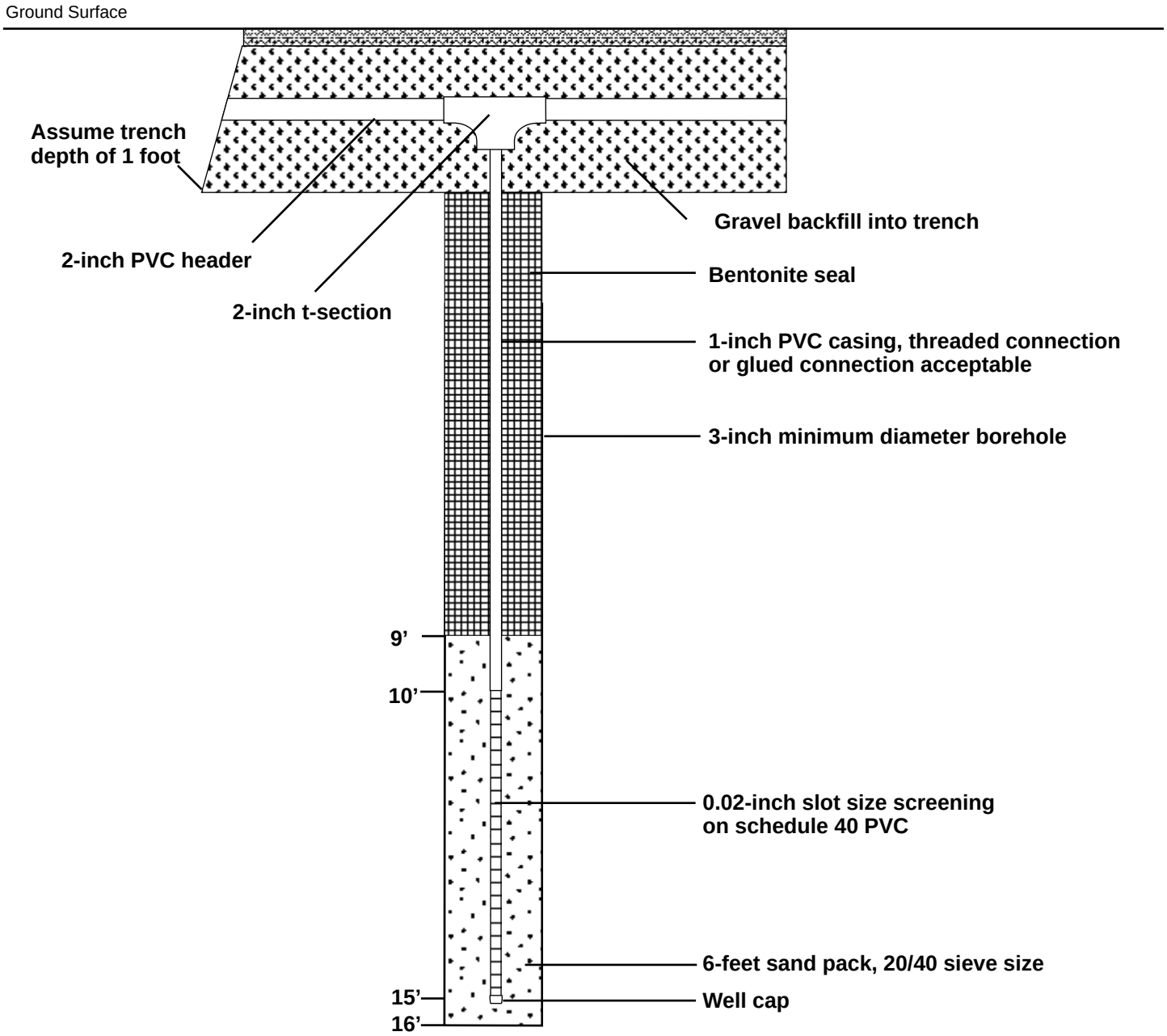

Notes:
1. Diagram not to scale.
2. Well screen depth and length may be adjusted in the field based on lithologic observation and depth of groundwater.

Figure 5: Biogenic Gas Extraction Well Construction Diagram
Former Chem-Oil Refinery
2020Walnut Avenue
Signal Hill, California

DRAWN BY:	DATE:	PROJECT:
MRd	**October 2012**	**ChemOil.p01**

Ami Adini & Associates, Inc.

NOTES

1. Not all wells in barrier system shown in P&ID. Number of wells and piping lines drawn back to equipment compound (blowers, gate valves, etc.) shown to depict system circuits only. Distribution and total number of wells explained in circuit overview.

2. Each air injection compressor will service two Injection Circuits.

3. Each biogenic gas extraction blower will service one extraction circuit.

4. Nutrient injection pump and holding tank will be mobile and connect as needed to inlets for nutrient injection.

5. Vapor effluent from EQP-1 will be trenched to EQP-2 and treated with one vapor treatment system.

Circuit Overview

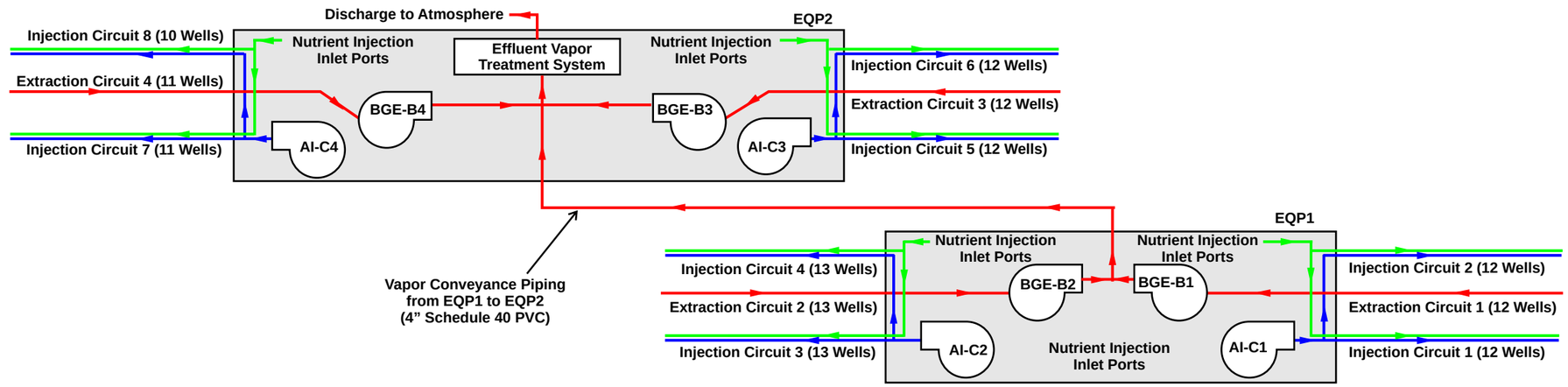

Piping and Instrumentation Diagram

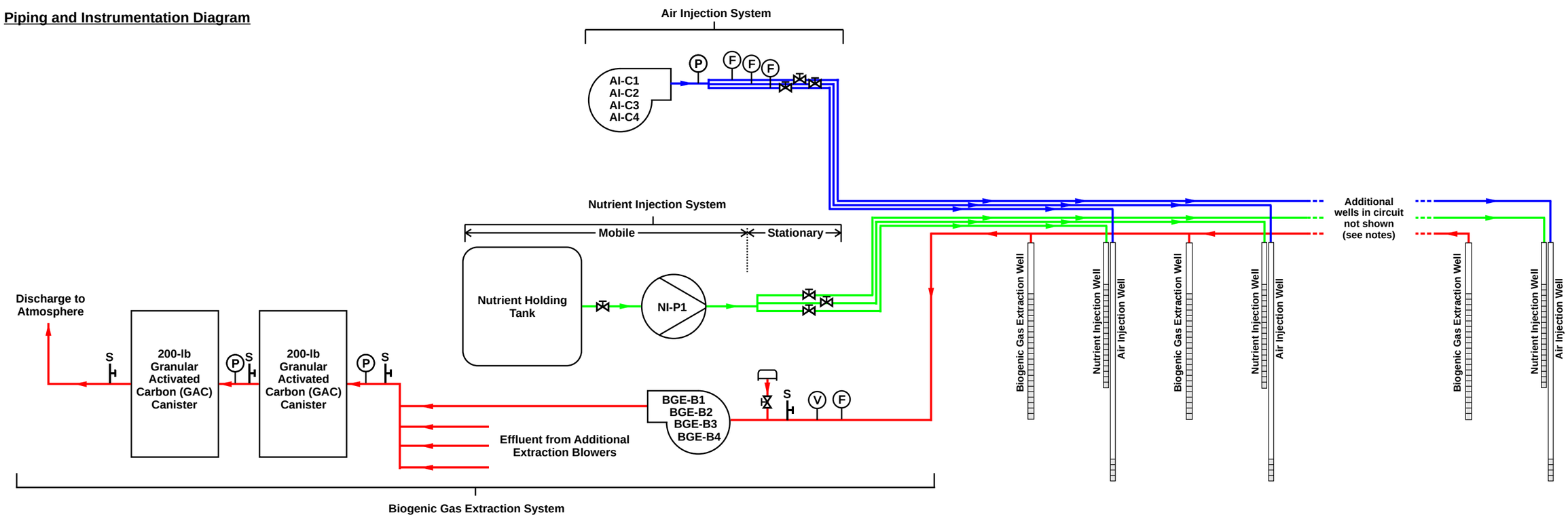

LEGEND

BGE-B1, BGE-B2, BGE-B3, BGE-B4 — 2-Horsepower (160 scfm) Regenerative blower
- BGE-B1 connected to 12 wells
- BGE-B2 connected to 13 wells
- BGE-B3 connected to 12 wells
- BGE-B4 connected to 11 wells

AI-C1, AI-C2, AI-C3, AI-C4 — 2.9-Horsepower (28 scfm) Rotary-vane compressor
- AI-C1 connected to 24 wells
- AI-C2 connected to 26 wells
- AI-C3 connected to 24 wells
- AI-C4 connected to 21 wells

NI-P1 — Nutrient injection pump

S — Vapor sampling port

Fresh-air dilution assembly

F — Flow gauge

V — Vacuum gauge

P — Pressure gauge

Gate valve

Well (cross-section view)

Approximate location of screen

Common conveyance piping for biogenic gas extraction (BGE) wells, 2-inch-diameter, schedule 40 PVC (arrow indicates flow direction)

Tubing for air injection (AI) wells, individually piped 0.25-inch-diameter, nylon or polyethylene tubing (arrow indicates flow direction)

Piping for nutrient injection wells, individually piped 1-inch-diameter, schedule 80 PVC (arrow indicates flow direction)

Figure 6:
Circuit Overview with Piping and Instrumentation Diagram
Former Chem-Oil Refinery
2020 Walnut Avenue
Signal Hill, California

DRAWN BY:	DATE:	PROJECT:
SS	October 2012	ChemOil.p01

Ami Adini & Associates, Inc.

Barrier Monitoring Well Construction Diagram
BMW1 through BMW12

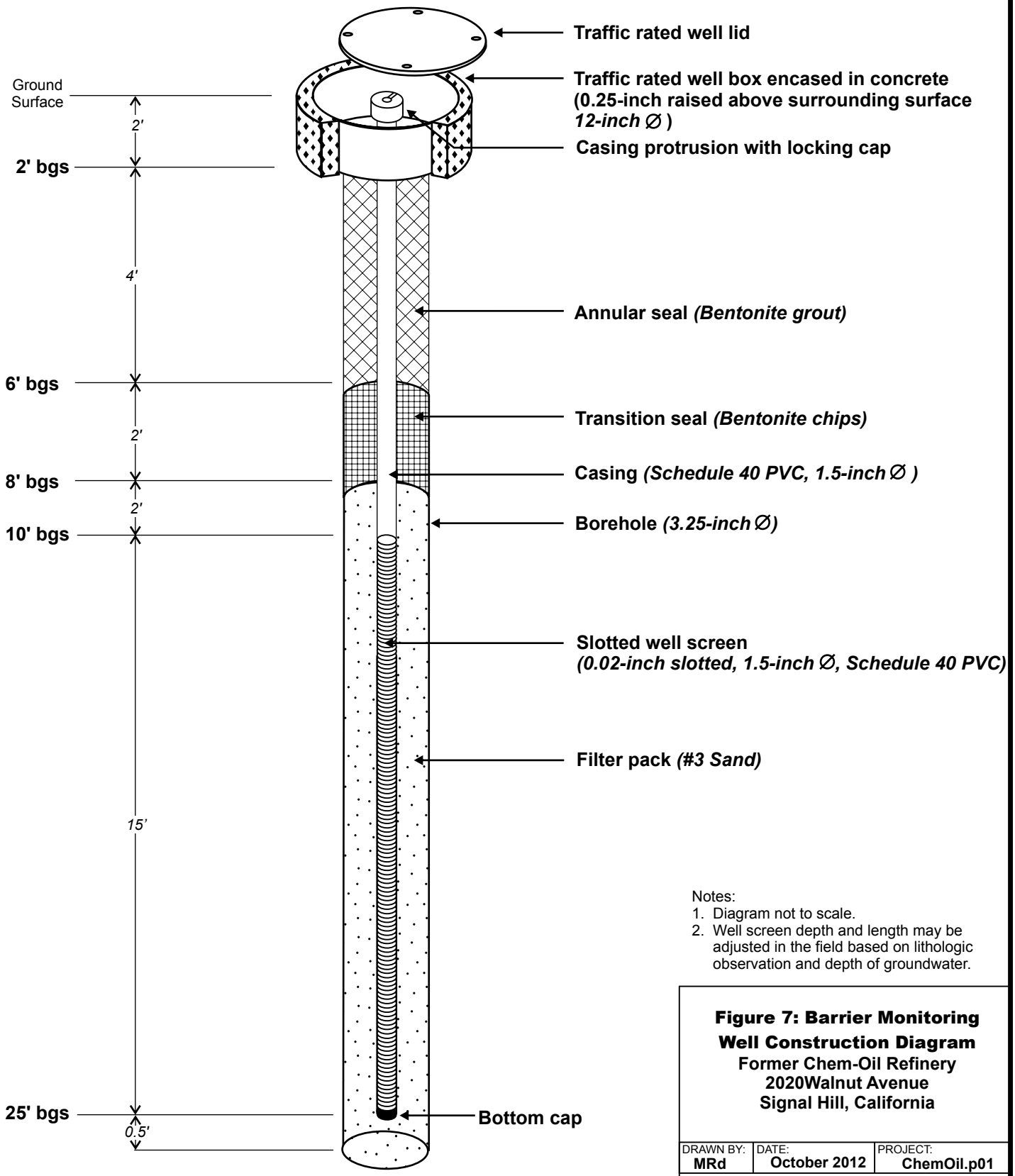

Notes:
1. Diagram not to scale.
2. Well screen depth and length may be adjusted in the field based on lithologic observation and depth of groundwater.

Figure 7: Barrier Monitoring Well Construction Diagram
Former Chem-Oil Refinery
2020Walnut Avenue
Signal Hill, California

DRAWN BY:	DATE:	PROJECT:
MRd	October 2012	ChemOil.p01

Ami Adini & Associates, Inc.

APPENDIX A

SME Equipment Specifications

DT4.10—4.40 Series

BECKER

ISO 9001 Certified
CE Compliant

100% OIL-LESS COMPRESSORS

The Becker DT4.10—4.40 Series compressors are 100% oil-less rotary vane compressors. They are designed to operate on a continuous basis at any point from atmospheric pressure to a pressure of 15 PSIG.

The DT series compressors are direct drive units and are supplied with a TEFC flange mounted electric motor. Each pump is equipped with an integral pressure relief valve, a 10µ inlet filter, and vibration isolators as standard equipment.

Becker DT series compressors have a reputation for being exceptionally quiet. These newly redesigned pumps are even quieter, and operate cooler than previous units. If you are an OEM, their attractive styling will never cause embarrassment when included with your product.

These 100% oil-less, non-polluting compressors are ideal for applications where oil or water is objectionable. All Becker DT series compressors use long-life, self-lubricating graphite composite vanes. Vacuum, and combination pressure/vacuum models are also available.

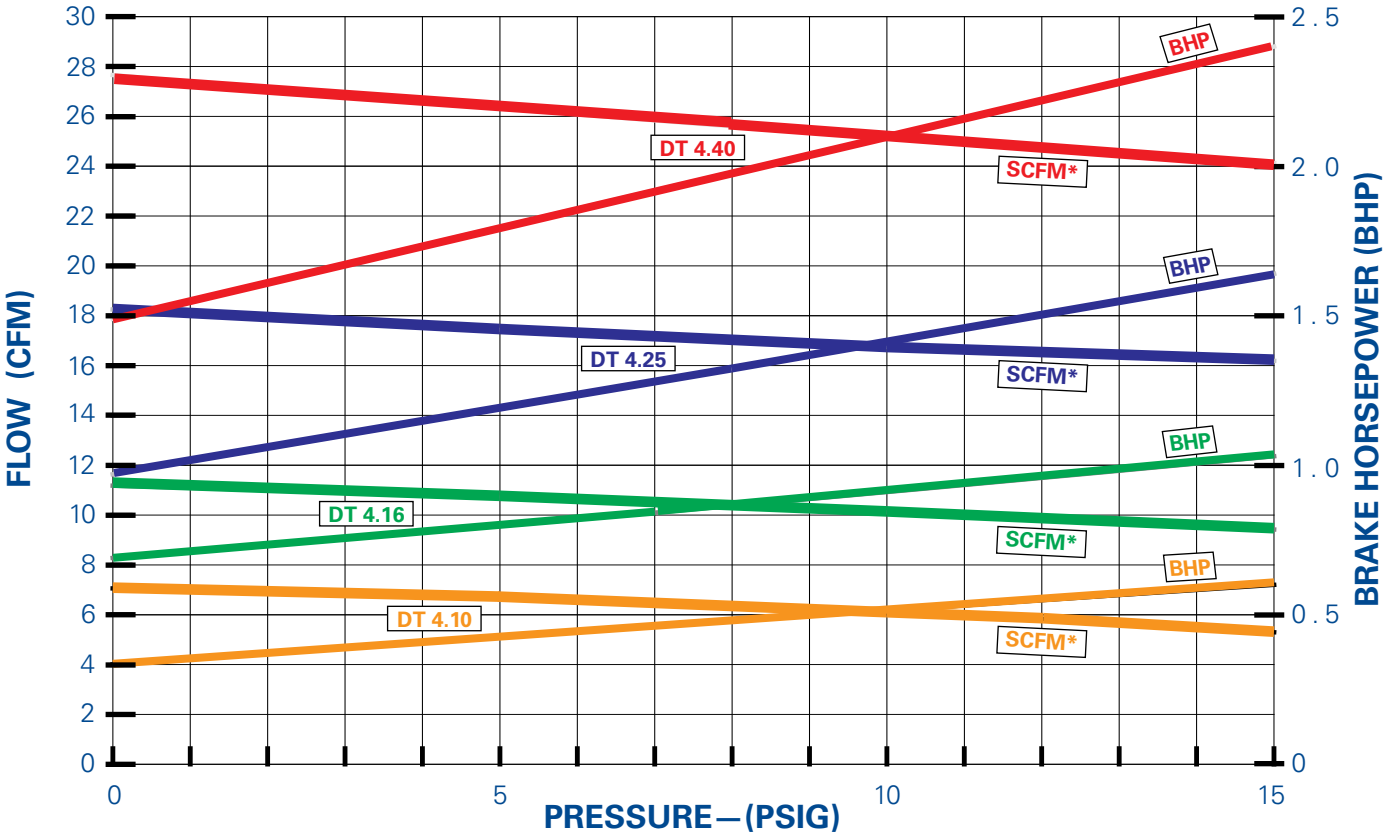

* @ 29.92" Hg Bar. Pr.; 68°F; 36% R.H.; 0.075#/ft³

Becker Pumps Corp. • 100 East Ascot Lane • Cuyahoga Falls, Ohio 44223-3768
Ph. (330) 928-9966 • FAX: (330) 928-7065 • e-mail: info@beckerpumps.com • beckerpumps.com

BECKER

TECHNICAL DATA

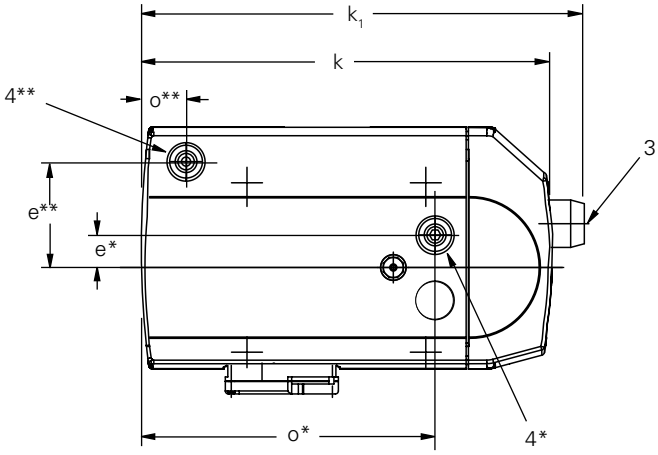

Top View

* :
Models DT4.10
& DT4.16

** :
Models DT4.25
& DT4.40

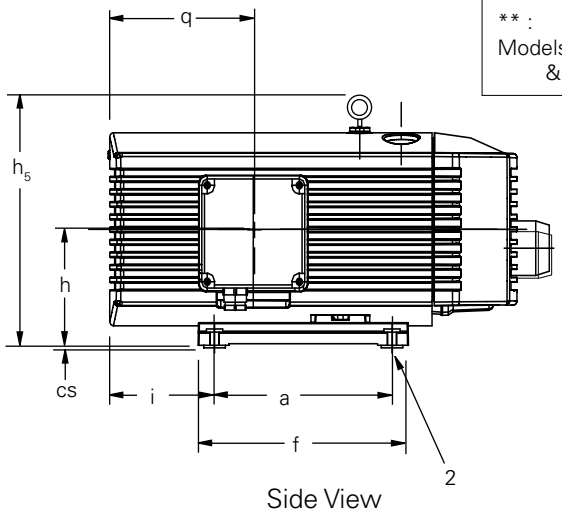

Side View

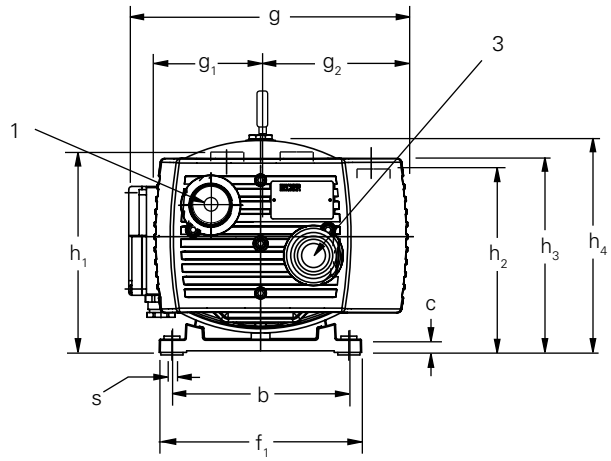

End View (Opposite Motor End)

All data based on 60 Hz operation

	DT 4.10	DT 4.16	DT 4.25	DT 4.40
Flow (SCFM @ 0 PSIG)	7.1	11	18	28
Horsepower	0.6	0.94	1.75	2.9
Speed (RPM)	1740	1740	1740	1740
Max. Oper. Pressure (PSIG)	15	15	15	15
Weight (lbs.)—w/ motor	35.2	51.7	80.3	101
Noise Level (Max. dBA)	62	64	68	70
Outlet size (BSP, inches)	½	½	¾	¾
Dimensional Data	(Inches)			
a	6.3	7.95	8.66	8.66
b	4.41	4.92	8.19	8.19
c	0.6	0.6	0.6	0.6
cs	0.12	0.12	0.12	0.12
e	1.38	1.38	5.12	5.12
f	7.88	9.53	10.24	10.24
f_1	5.6	6.1	9.37	9.37
g	8.11	9.1	12.92	12.92
g_1	3.54	4.03	4.92	4.92
g_2	3.54	4.03	6.81	6.81
h	4.21	4.45	5.51	5.51
h_1	6.66	7.4	—	—
h_2	—	—	8.43	8.43
h_3	6.93	7.32	8.9	8.9
h_4	7.44	8.07	9.84	9.84
h_5	7.68	8.3	11.42	11.42
i	4.17	2.88	4.45	7.0
k	15.25	16.38	19.89	23.04
k_1	16.9	17.8	21.46	24.61
o	10.12	11.48	2.16	2.16
q	4.84	5.97	6.81	7.56
s	0.27	0.27	0.27	0.27

Manufacturer reserves right to alter data without notice.

1 - Inlet
2 - Vibration Isolator
3 - Pressure Regulating Valve
4 - Discharge Port

3LIT0026-DT4

Becker Pumps Corp. • 100 East Ascot Lane • Cuyahoga Falls, Ohio 44223-3768
Ph. (330) 928-9966 • FAX: (330) 928-7065 • e-mail: info@beckerpumps.com • beckerpumps.com

R3-R7 Series - Explosion Proof Motors

R3105N-50

R4 - R7 Series

MODELS	Maximum Pressure (“H_2O) 60 Hz	50 Hz	Maximum Vacuum (“H_2O) 60 Hz	50 Hz	Maximum Air Flow (CFM) 60 Hz	50 Hz
R3105N-50	43	31	40	28	53	44
R4110N-50 **R4310P-50**	51	38	48	35	92	74
R4P115N-50	65	45	60	40	133	112
R5125Q-50 **R5325R-50**	55 65	- 50	60 65	- 47	160 160	- 133
R6130Q-50 **R6340R-50**	60 100	75 75	70 80	65 65	215 215	180 180
R6P155Q-50 **R6P355R-50**	95 100	80 80	85 85	65 65	280 280	235 232
R7100R-50	100	90	110	85	425	350

PRODUCT FEATURES

- Rugged design, maintenance free
- Quiet operation within OSHA standards
- Blowers and motors rated for continuous duty
- UL and CSA approved multi-voltage motors, incorporating approved thermal protection
- Motors classified as Explosion Proof Division 1 and 2, for Group D explosive atmospheres
- Motors carry full rated load at temperatures below Class B motor insulation limits
- Class F motor insulation used in motors larger than 1 HP
- Motors conform to NEMA frame sizes; motor enclosures conform to IP54 (suitable for outdoor use)
- Pilot duty thermal overload protection is standard on all 1 HP and larger motors
- Double sealed motor ball bearings with a B10 life exceeding 30,000 hours of continuous operation at the maximum rated continuous blower load
- Sealed air streams
- Aluminum impeller, housing and cover; viton shaft seal.
- Pressurized and leak-tested to less than 5cc/minute

Recommended Accessories	**R3 Series**	**R4 Series**	**R4P Series**	**R5 Series**	**R6 Series**	**R6P Series**	**R7 Series**
Pressure Gauge	AJ496	AJ496	AE133	AE133	AE133	AE133	AE133
Vacuum Gauge	AJ497	AJ497	AE134	AE134	AE134	AE134	AE134
Pressure Filter	AJ126C	AJ126D	AJ126D	AJ126D	AJ126F	AJ126F	AJ126G
Vacuum Filter (Inline)	AJ151C	AJ151D	AJ151D	AJ151E	AJ151G	AJ151G	AJ151H

Gast Manufacturing Inc., A Unit of IDEX Corporation, Benton Harbor, MI USA • ph 616-926-6171 • fx 616-925-8288 • www.gastmfg.com
®Registered Trademark/™Trademark of Gast Manufacturing Inc., Copyright ©2001 Gast Manufacturing Inc. All rights reserved.

Product Dimensions (in. mm)

Model R3

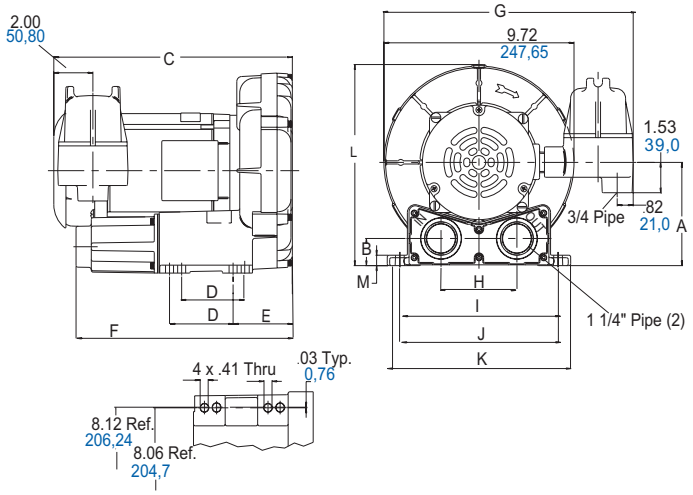

Models R6P, R7

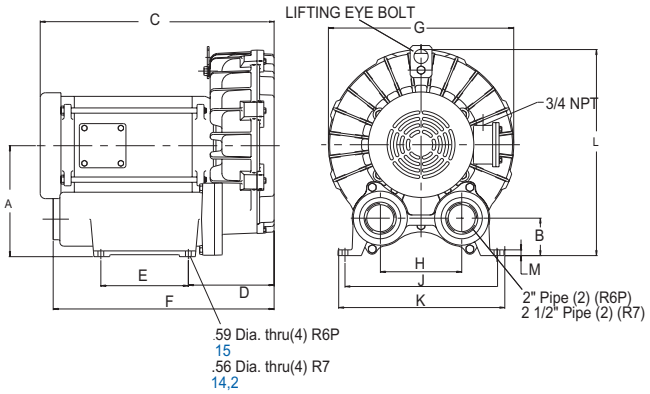

Models R4, R4P, R5, R6

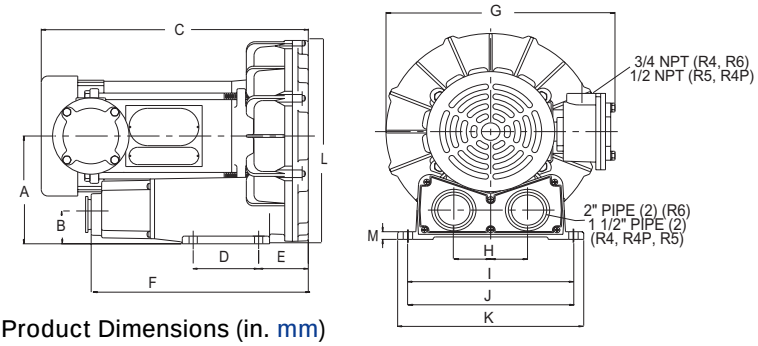

Mounting Hole Detail

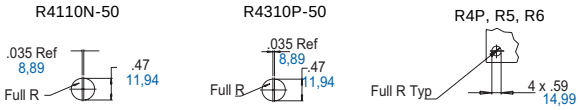

Product Dimensions (in. mm)

Model	A	B	C	D	E	F	G	H	I	J	K	L	M
R3105N-50	5.21	1.37	12.3	3.25	3.06	11.06	12.75	3.88	8.06	8.12	9.38	10.15	.53
	132	35	312	83	78	281	324	99	205	206	238	258	13
R4110N-50	6.18	1.68	15.34	3.75	2.85	12.44	12.34	3.96	8.86	8.93	10.00	11.80	.44
	157	43	390	95	72	316	313	101	225	227	254	300	11
R4310P-50	6.18	1.68	14.09	3.75	2.84	12.44	12.34	3.96	8.86	8.93	10.00	11.80	.44
	157	43	358	95	74	316	313	101	225	227	254	300	11
R4P115N-50	6.98	1.84	17.41	4.50	3.25	13.93	13.75	4.75	10.25	10.31	11.75	13.61	.60
	177	47	442	114	83	354	349	121	260	262	298	346	15
R5125Q-50	7.02	1.82	17.59	4.50	3.55	14.22	13.72	4.75	10.25	10.31	11.75	13.80	.59
	178	46	447	114	90	361	348	121	260	262	298	351	15
R5325R-50	7.02	1.82	16.75	4.50	3.55	14.22	13.56	4.75	10.25	10.31	11.75	13.80	.59
	178	46	1425	114	90	361	344	121	260	262	298	351	15
R6130Q-50	7.75	1.94	18.97	5.50	3.85	16.02	15.17	4.92	11.38	11.42	12.96	15.34	.52
	197	49	482	140	98	407	385	125	289	290	329	390	13
R6340R-50	7.75	1.94	18.82	5.50	3.85	15.89	15.17	4.92	11.38	11.42	12.96	15.34	.52
	197	49	478	140	98	404	385	125	298	290	329	390	13
R6P155Q-50	9.77	3.15	22.81	5.12	5.51	16.85	16.75	5.00	-	11.42	12.80	18.14	.50
	248	80	579	130	140	428	425	127	-	290	325	461	13
R6P355R-50	9.77	3.15	19.92	5.12	5.51	16.85	16.75	5.00	-	11.42	12.80	18.14	.50
	248	80	506	130	140	428	425	127	-	290	325	461	13
R7100R-50	10.79	3.64	22.77	8.36	8.50	21.50	18.00	7.90	-	14.76	16.14	20.03	.56
	274	92	578	212	216	546	457	201	-	375	410	509	14

Notice: Specifications subject to change without notice.

®Registered Trademark/ ™ Trademark of Gast Manufacturing Inc., Copyright ©2001 Gast Manufacturing Inc. All rights reserved.

Product Specifications

MODEL NUMBER		R3105N-50	R4110N-50	R4310P-50	R4P115N-50
Motor Enclosure		XPFC	XPFC	XPFC	XPFC
HP/kW	60 Hz	.50/0,37	1.0/0,75	1.0/0,75	1.5/1,1
	50 Hz	.33/0,25	.60/0,45	.60/0,45	1.0/0,75
Voltage	60 Hz	115/208-230-1	115/208-230-1	208-230/460-3	115/208-230-1
	50 Hz	110/220-240-1	110/220-240-1	220/380-3	110/220-240-1
Amps	60 Hz	5.2/2.9-2.6	11.4/6.2-5.6	3.4-3.3/1.6	20.3/11.2-10.6
	50 Hz	4.8/2.4-2.2	9.2/5.2-4.6	3.2/1.6	15.2/7.6-8
Starting Amps	60 Hz	12.5 @ 230V	36.5 @ 230V	19.7 @ 230V	60.6 @ 230V
	50 Hz	13 @ 220V	40.6 @ 240V	23.3 @ 220V	Consult Factory
Insulation Class		B	B	B	F
Recommended NEMA Starter Size		00/00	0/00	0/0	1/0
Net Weight (lbs/kg)		52/24	60/28	58/27	79/36

MODEL NUMBER		R5125Q-50	R5325R-50	R6130Q-50	R6340R-50
Motor Enclosure		XPFC	XPFC	XPFC	XPFC
HP/kW	60 Hz	2.0/1,5	2.0/1,5	3.0/2,2	4.0/3,0
	50 Hz	-	1.5/1,1	2.5/1,9	3.0/2,2
Voltage	60 Hz	115/230-1	208-230/460-3	230-1	208-230/460-3
	50 Hz	-	190-220/380-415-3	220-240-1	190-220/380-415-3
Amps	60 Hz	25/12.5	6.6-6.1/3.05	16.3	13-12/6
	50 Hz	-	5.0-4.4/2.5-2.6	14.7-13.5	14.4-13.4/7.2-6.8
Starting Amps	60 Hz	78 @ 230V	48 @ 230V	64 @ 230V	125 @ 230V
	50 Hz	-	Consult Factory	Consult Factory	Consult Factory
Insulation Class		F	F	F	F
Recommended NEMA Starter Size		1/0	0/0	1	1/0
Net Weight (lbs/kg)		77/35	75/34	129/59	112/51

MODEL NUMBER		R6P155Q-50	R6P355R-50	R7100R-50
Motor Enclosure		XPFC	XPFC	XPFC
HP/kW	60 Hz	5.5/4,1	6.0/4,5	10/7,5
	50 Hz	4.0/3,0	4.5/3,4	8.0/6,0
Voltage	60 Hz	230-1	208-230/460-3	208-230/460-3
	50 Hz	220-240-1	190-220/380-415-3	190-220/380-415-3
Amps	60 Hz	29.9	20-18/9	26.5-24/12
	50 Hz	20.8-19.1	14.9-11/7.45-5.8	23.2-21.0/11.6-10.9
Starting Amps	60 Hz	198.4 @ 230V	59 @ 460V	105 @ 460V
	50 Hz	189 @ 240V	Consult Factory	Consult Factory
Insulation Class		F	F	F
Recommended NEMA Starter Size		0/2	1/0	2/1
Net Weight (lbs/kg)		243/110	233/105	297/134

Gast Manufacturing Inc., A Unit of IDEX Corporation, Benton Harbor, MI USA • ph 616-926-6171 • fx 616-925-8288 • www.gastmfg.com
®Registered Trademark/™Trademark of Gast Manufacturing Inc., Copyright ©2001 Gast Manufacturing Inc. All rights reserved.

R3105N-50

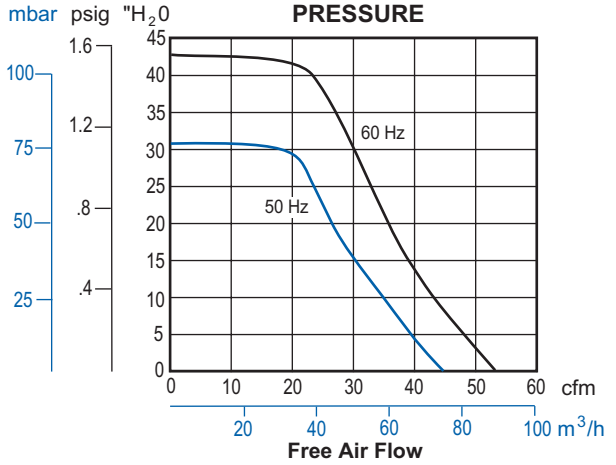

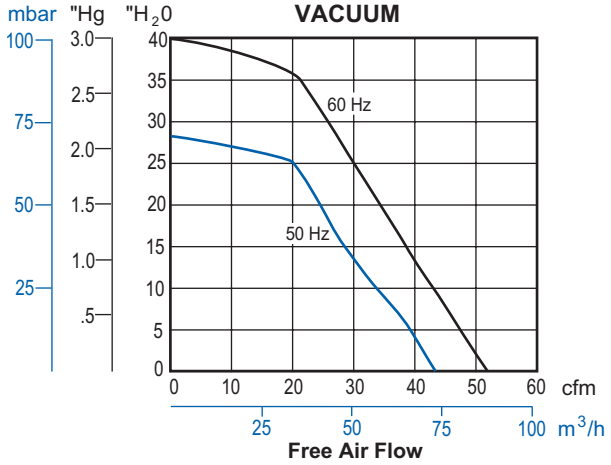

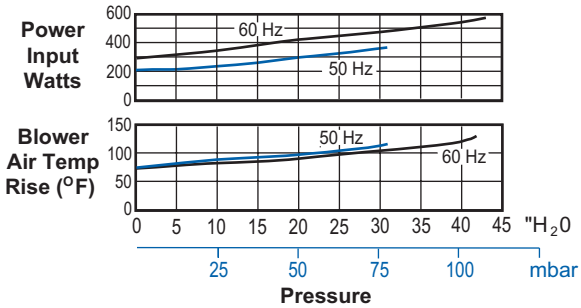

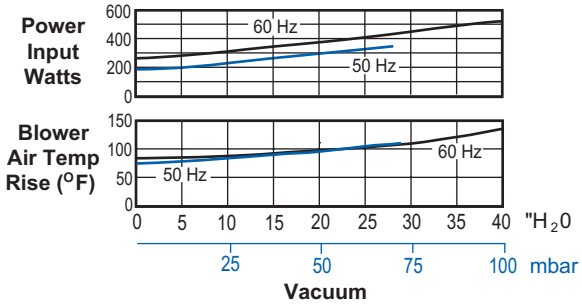

R4110N-50/R4310P-50

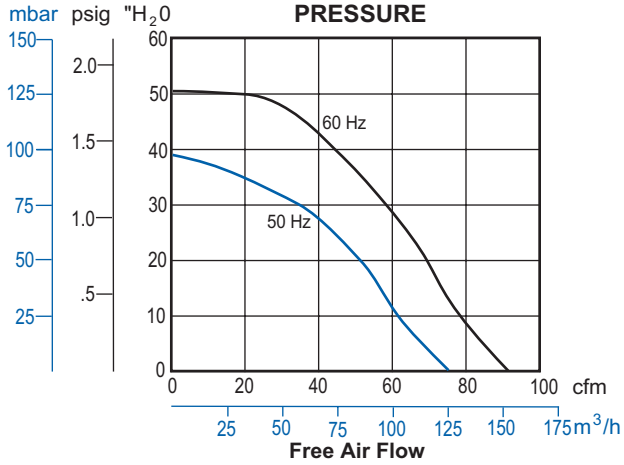

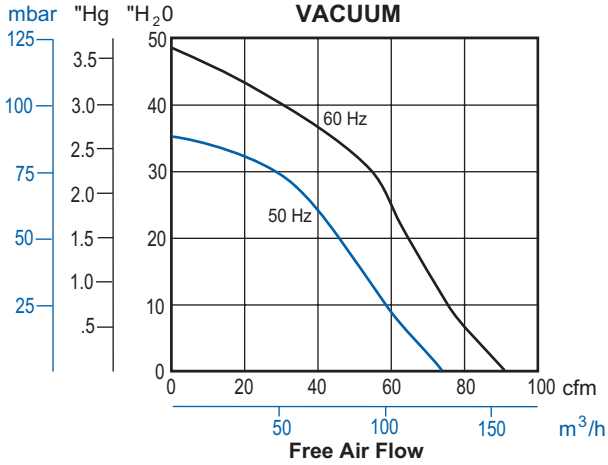

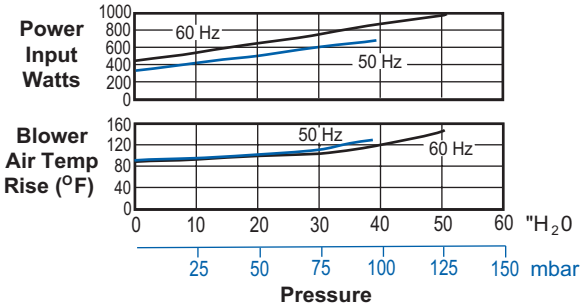

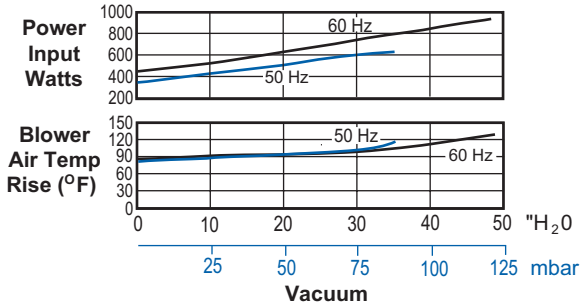

®Registered Trademark/ ™ Trademark of Gast Manufacturing Inc., Copyright ©2001 Gast Manufacturing Inc. All rights reserved.

Q. What happens to the noise when I locate two blowers close together?

A. If the blowers are of the same design they produce sound frequencies that are close together. These may cause a “beating” change in volume of the blower noise. This is because the units are not synchronized. If two small blowers are needed this change in volume can be reduced by moving tham further apart. With larger blowers a dual blower with two blowers on one motor will solve this problem.

Q. What causes the noise relief valves make?

A. Air rush through the valve.

Q. How do I control relief valve or bleed off valve noise?

A. Attach AJ121 series silencer on the port of the relief valve that is open to atmosphere.

Contact Gast at 616-926-6171 or www.gastmfg.com with any further questions you may have on reducing blower noise in your application.

Noise Reduction and Absorption Coefficients for Common and Specialty Noise Reduction Materials

	125Hz	250Hz	500Hz	1000Hz	2000Hz	4000Hz	NRC
Brick, unglazed	.03	.03	.03	.04	.05	.07	.04
Carpet 1/4 in pile height	.05	.10	.15	.30	.50	.55	.26
Fabric Heavy Velour 18 oz per sq. yd draped to 1/2 area	.14	.35	.55	.72	.70	.65	.62
Hardwood Plywood Paneling 1/4 in thick wood frame	.58	.22	.07	.04	.03	.07	.09
Tecnifoam* TFP4 Pyramind shape	.39	.60	1.21	1.14	1.16	1.13	1.05
Tecnifoam* TFW4000 Anaechoic Wedge shape	.64	1.10	1.34	1.23	1.24	1.21	1.25

Source: Mechancial Engineering Reference Manual

*TFP4 and TFW4000 are products of Tecnifoam, Inc., 7145 Boone Avenue North, Minneapolis, MN., 55428

Blower Sound Levels of Gast Blowers

Data is highest sound level out of 4 places around the blower at 1 meter.

Data represents average of several units run at nominal voltage.

Lowest to highest maximum dba level throughout performance range is shown.

Readings at other than the maximum around the blower at 1 meter may be from 2 to 10 dba less than data shown.

Readings taken in a laboratory sound room that does not reflect much noise.

Note: For comparison purposes, some blower manufacturers show sound data from 1–1/2 meters instead of from 1 meter; also, some blower manufacturers show an “average” sound level across performance instead of the full range between minimum and maximum sound levels; either of these methods will provide different and usually lower sound levels compared to Gast’s sound level method.

60Hz	dBa at Pressure	50Hz	dBa at Pressure
R1	59-67	R1	59-64
R2	66	R2	61-63
R3	67-70	R3	63-68
R4	69-73	R4	64-69
R4P	69-75	R4P	64-71
R5	73-77	R5	71-77
R6	73-79	R6	70-79
R6P	82-83	R6P	77-80
R6PP	77-79	R6PP	73-76
R6PS	76-77	R6PS	72-75
R7	82-84	R7	77-79
R7P	77-80	R7P	74-79
R7S	75-77	R7S	72-76
R9	82-85	R9	78-85
R9P	81-88	R9P	79-86
R9S	79-81	R9S	77-81
R4H	80-82	R4H	75-81
R4M	82-83	R4M	78-79
R7H	83	R7H	79-81

60Hz	dBa at Vacuum	50Hz	dBa at Vacuum
R1	58-63	R1	54-60
R2	67	R2	63-64
R3	67-71	R3	64-69
R4	70-72	R4	66-70
R4P	73-74	R4P	68-71
R5	75-76	R5	71-73
R6	78-80	R6	74-77
R6P	81-85	R6P	79-81
R6PP	81-83	R6PP	78-79
R6PS	79-81	R6PS	76-77
R7	85-87	R7	79-84
R7P	84-86	R7P	80-83
R7S	82-83	R7S	78-80
R9	85-90	R9	83-84
R9P	88-90	R9P	84-87
R9S	87-88	R9S	83-86
R4H	82-89	R4H	79-88
R4M	85-89	R4M	80-85
R7H	82-91	R7H	80-90

®Registered Trademark/ ™ Trademark of Gast Manufacturing Inc., Copyright ©2001 Gast Manufacturing Inc. All rights reserved.